CITY OF WILLCOX
WASTEWATER TREATMENT PLANT
EXPANSION PROJECT

GENERAL NOTES

1. ALL CONSTRUCTION METHODS AND MATERIALS SHALL CONFORM TO CURRENT DETAILS AND SPECIFICATIONS AS PREPARED BY MAG (MARICOPA ASSOCIATION OF GOVERNMENTS) OR ANY APPROPRIATE PROVISIONS OR DETAILS PROVIDED BY THE CITY OF WILLCOX. ALL UTILITY INSTALLATIONS (OR REQUIRED RELOCATIONS OR ADJUSTMENTS), SHALL BE IN ACCORDANCE WITH AWWA, UNIFORM PLUMBING CODE, NATIONAL ELECTRIC CODE, ABOD RULES AND REQUIREMENTS, AND MAG REQUIREMENTS AS APPLICABLE. IT IS THE CONTRACTORS RESPONSIBILITY TO OBTAIN A COPY OF ALL STANDARDS AND DETAILS THAT ARE REFERENCED ON THESE PLANS.

2. ANY WORK PERFORMED WITHOUT THE APPROVAL OF THE OWNER AND/OR INSPECTOR AND/OR ALL CONSTRUCTION OR MATERIALS NOT IN CONFORMANCE WITH THESE PLANS OR TECHNICAL SPECIFICATIONS ARE SUBJECT TO REMOVAL AND REPLACEMENT AT THE EXPENSE OF THE CONTRACTOR. THE CONTRACTOR IS RESPONSIBLE FOR NOTIFYING THE OWNER OR INSPECTOR AT LEAST 48 HOURS PRIOR TO STARTING ANY PHASE OF CONSTRUCTION.

3. CONTRACTOR SHALL ASSUME SOLE AND COMPLETE RESPONSIBILITY FOR JOB SITE CONDITIONS DURING THE COURSE OF CONSTRUCTION OF THE PROJECT, INCLUDING SAFETY OF ALL PERSONS AND PROPERTY. THIS REQUIREMENT SHALL APPLY CONTINUOUSLY AND NOT BE LIMITED TO NORMAL WORKING HOURS. THE CONTRACTOR SHALL DEFEND, INDEMNIFY AND HOLD THE OWNER AND THE ENGINEER HARMLESS FROM ANY AND ALL LIABILITY, REAL OR ALLEGED, IN CONNECTION WITH THE PERFORMANCE OF WORK ON THIS PROJECT, EXCEPTING FOR LIABILITY ARISING FROM THE NEGLIGENCE OF THE OWNER OR THE ENGINEER.

4. THE HORIZONTAL AND VERTICAL LOCATIONS AND COMPLETENESS OF EXISTING UNDERGROUND OR OVERHEAD UTILITIES SHOWN ON THESE PLANS ARE APPROXIMATE ONLY, AND HAVE NOT BEEN INDEPENDENTLY VERIFIED BY THE OWNER OR THE ENGINEER. THE CONTRACTOR, AS REQUIRED BY LAW, SHALL CALL BLUE STAKE (1-800-782-5348) FOR THE LOCATIONS OF ALL UNDERGROUND UTILITIES TWO WORKING DAYS BEFORE DIGGING AT EACH LOCATION. THE CONTRACTOR SHALL VERIFY WHETHER KNOWN UTILITY COMPANIES PROVIDING SERVICE IN THE AREA PARTICIPATE IN BLUE STAKE, AND SHALL DIRECTLY CONTACT NON-PARTICIPATING UTILITY COMPANIES TO COMPLETE THE UTILITY INVESTIGATION. IRRIGATION AND DRAINAGE FACILITIES ARE CONSIDERED UTILITIES. THE CONTRACTOR IS RESPONSIBLE FOR DETERMINING IN ADVANCE OF CONSTRUCTION OPERATIONS THE LOCATION OF ALL UTILITIES (GAS, TELEPHONE, ELECTRICAL, WATER, SEWER, ETC.), WHETHER SHOWN ON THE DRAWINGS OR NOT, THAT MAY INTERFERE WITH THE CONTRACTOR'S CONSTRUCTION OPERATIONS. ANY UTILITY RELOCATIONS OR ADJUSTMENTS NECESSARY FOR COMPLETION OF THE WORK SHALL BE RELOCATED OR ADJUSTED BY THE THE CONTRACTOR OR THE CONTRACTOR SHALL BE RESPONSIBLE FOR ARRANGEMENT AND/OR RELOCATION OF CONFLICTING UTILITIES BY OTHER AGENCIES, WHETHER SHOWN ON THE PLANS OR NOT. SUCH WORK IS CONSIDERED INCIDENTAL TO THE CONTRACT AND NO ADDITIONAL COMPENSATION SHALL BE PERMITTED.

INDIVIDUAL UTILITY SERVICE LINES ARE TYPICALLY NOT LOCATED BY UTILITY COMPANIES AND ARE NOT SHOWN ON THESE PLANS. THE CONTRACTOR IS REPONSIBLE FOR THE REPAIR OR REPLACEMENT OF AND PROVISION OF TEMPORARY SERVICE FOR ALL INDIVIDUAL UTILITY SERVICE LINES. THESE AND ANY OTHER ACTIVITIES NECESSARY FOR THE MAINTENANCE OF INDIVIDUAL UTILITY SERVICE LINES ARE CONSIDERED INCIDENTAL TO THE CONTRACT AND NO ADDITIONAL COMPENSATION SHALL BE PERMITTED.

5. THE CONTRACTOR SHALL COMPLY WITH ALL APPLICABLE OCCUPATIONAL SAFETY AND HEALTH ADMINISTRATION REGULATIONS.

6. THE CONTRACTOR SHALL OBTAIN AND PAY FOR ANY NECESSARY PERMITS REQUIRED BY CITY, COUNTY, STATE AND FEDERAL AGENCIES PRIOR TO CONSTRUCTION, AND SHALL PROVIDE OWNER AND ENGINEER WITH COPIES OF ALL PERMITS OBTAINED.

7. THE CONTRACTOR SHALL PROVIDE CONSTRUCTION STAKING BASED ON THE INFORMATION CONTAINED WITHIN THESE DRAWINGS, OR INSTRUCTIONS GIVEN. WHEN WORK IS COMPLETED, THE CONTRACTOR SHALL PROVIDE THE ENGINEER WITH ONE SET OF BLUELINES WITH ALL CHANGES MARKED IN RED AND INITIALLED. THESE ACTIVITIES ARE CONSIDERED INCIDENTAL TO THE CONTRACT, AND NO ADDITIONAL COMPENSATION SHALL BE PERMITTED.

8. THE CONTRACTOR SHALL TAKE WHATEVER STEPS NECESSARY TO PREVENT AND CONTROL DUST DUE TO CONSTRUCTION OPERATIONS AND SHALL CONTROL DUST AS DIRECTED BY THE OWNER OR INSPECTOR. DUST CONTROL IS CONSIDERED INCIDENTAL TO THE CONTRACT AND NO ADDITIONAL COMPENSATION SHALL BE PERMITTED.

9. THE CONTRACTOR SHALL OBTAIN ALL NECESSARY A.D.O.T., RAILROAD, COCHISE COUNTY AND CITY OF WILLCOX RIGHT-OF-WAY USE PERMITS, AND PROVIDE OWNER AND ENGINEER WITH A COPY OF THE APPROVED PERMIT(S) WITH ALL ACCOMPANYING DOCUMENTATIONS, INCLUDING TRAFFIC CONTROL PLANS, WITHIN 10 WORKING DAYS PRIOR TO ANY CONSTRUCTION ACTIVITIES AT THE PERMITTED SITE. THE OWNER AND ENGINEER WILL NOT PARTICIPATE IN THE PROCUREMENT OF PERMITS.

THE CONTRACTOR SHALL BE SOLELY RESPONSIBLE FOR COMPLIANCE WITH THE PERMIT REQUIREMENTS INCLUDING THE PROVISION OF SIGNING AND PERSONNEL NECESSARY FOR THE MAINTENANCE AND PROTECTION OF THE TRAVELING PUBLIC AND WILL BE RESPONSIBLE FOR ALL TRAFFIC CONTROL FOR THE DURATION OF THE PROJECT IN STRICT COMPLIANCE WITH THE PERMIT(S) ISSUED BY THE ENTITY(IES) OF JURISDICTION.

THE CONTRACTOR SHALL PROVIDE WRITTEN NOTICE OF CONSTRUCTION ACTIVITIES TO AFFECTED PUBLIC AND OR PRIVATE ENTITIES WHICH UTILIZE OR RELY UPON ACCRESS BY/TO ROADWAYS OR EASEMENTS WITHIN CONSTUCTION AREAS.

PERMITTING, TRAFFIC CONTROL, AND ALL ACTIVITIES INCIDENT THERETO ARE CONSIDERED INCIDENTAL TO THE CONTRACT, AND NO ADDITIONAL COMPENSATION SHALL BE PERMITTED

10. THE CONTRACTOR SHALL BE RESPONSIBLE FOR REPAIR OR REPLACEMENT OF ANY IMPROVEMENTS OR FACILITIES, ABOVE OR BELOW GROUND, NEW OR EXISTING, WHICH ARE SCARRED, DAMAGED, OR REMOVED DURING CONSTRUCTION OPERATIONS.

11. EXACT POINTS OF MATCH AND/OR TERMINATION OF FACILITIES INSTALLED UNDER THIS CONTRACT, IF NECESSARY, MAY BE DETERMINED IN THE FIELD BY THE ENGINEER OR HIS INSPECTOR.

12. NO JOB WILL BE CONSIDERED COMPLETE UNTIL ALL CURBS, PAVEMENTS, AND SIDEWALKS HAVE BEEN SWEPT CLEAN OF ALL DIRT AND DEBRIS.

13. THE OWNER WILL PROVIDE GEOTECHNICAL TESTING FOR CONSTUCTION QUALITY CONTROL BY AN INDEPENDANT CERTIFIED FIRM. THE CONTRACTOR SHALL BE RESPONSIBLE FOR ALL RETESTING COSTS WHICH WILL BE REQUIRED WHEN WORK FAILS TO MEET SPECIFICATIONS.

COMPACTION DENSITY TEST ON TRENCH BEDDING, BACKFILL AND ROADWAY MATERIALS SHALL BE CONDUCTED TO ENSURE CONFORMANCE WITH THE SPECIFICATIONS AT DEPTHS AND LOCATIONS AS DIRECTED BY THE INSPECTOR.

THE CONTRACTOR SHALL, AT HIS EXPENSE, FURNISH EQUIPMENT (EXCEPT TESTING EQUIPMENT), TOOLS AND LABOR AS NECESSARY TO ASSIST THE TESTING FIRM IN THE PERFORMANCE OF THEIR WORK

14. CONSTRUCTION ACTIVITIES THAT DISTURB FIVE OR MORE ACRES OF LAND MUST BE COVERED BY A NPDES PERMIT. CONSTRUCTION ACTIVITIES THAT DISTURB FIVE OR LESS ACRES OF LAND AND ARE PART OF A LARGER COMMON PLAN OF DEVELOPMENT ALSO MUST BE COVERED BY A NPDES PERMIT. IF A NPDES CONSTRUCTION STORM WATER PERMIT IS REQUIRED, THE CONTRACTOR SHALL PREPARE, IN ACCORDANCE WITH CHAPTER 2, "STORM WATER MANAGEMENT FOR CONSTRUCTION ACTIVITIES - DEVELOPING POLLUTION PREVENTION PLANS AND BEST MANAGEMENT PRACTICES" OBTAINED FROM THE NATIONAL TECHNICAL INFORMATION SERVICES BY CALLING (703) 487-4650 OR FROM ADEQ AT (602) 207-4574. THE GENERAL CONTRACTOR SHALL FILL OUT A NOTICE OF INTENT (NOI) FORM AVAILABLE FROM ADEQ AT (602) 207-4574 AND SHALL MAIL THE NOI FORM TO AUTHORITIES 48 HOURS PRIOR TO START-UP OF CONSTRUCTION ACTIVITIES THAT DISTURB THE SURFACE OF THE LAND. ALL CONSTRUCTION ACTIVITIES SHALL CONFORM TO AND IMPLEMENT THE PREPARED PLAN. THE PREPARED PLAN SHALL BE KEPT ON SITE DURING CONSTRUCTION, AVAILABLE FOR INSPECTION BY THE PUBLIC OR GOVERNMENTAL AUTHORITIES.

15. HORIZONTAL AND VERTICAL CONTROL IS BASED ON AERIAL SURVEY CONTROL PERFORMED BY AMEX LAND SURVEYING. COORDINATES AND LOCATION MAPPING OF CONTROL WILL BE PROVIDED TO THE CONTRACTOR PRIOR TO CONSTRUCTION.

16. THE BID DOCUMENTS FOR CITY OF WILLCOX WASTEWATER TREATMENT PLANT, USDA RURDEV DEVELOPMENT GRANT PROJECT NO. 97020 ARE A PART AND PARCEL OF THESE DRAWINGS. SPECIAL ATTENTION SHOULD BE GIVEN THE TECHNICAL SPECIFICATIONS OF THE BID DOCUMENTS.

SEWER NOTES

1. PVC SEWER PIPE AND FITTING SHALL BE VIRGIN PVC PLASTIC MATERIAL PER MAG SUBSECTION 745. A CERTIFICATE FROM THE MANUFACTURER SHALL BE FURNISHED CERTIFYING THAT THE PIPE AND FITTINGS MEET THE REQUIREMENTS OF ASTM D-3034, SDR-35. ALL PVC PIPE SHALL BEAR THE NATIONAL SANITATION FOUNDATION SEAL OF APPROVAL. DUCTILE IRON SEWER PIPE SHALL BE PRESSURE CLASS 350 CONFORMING WITH THE STANDARDS OF AWWA C-151.

2. A MINIMUM COVER OF 36" TO PIPE SPRINGLINE SHALL BE MAINTAINED OVER ALL BURIED SEWER MAINS, UNLESS EXTRA PROTECTION IS PROVIDED AS SPECIFIED ON THESE PLANS. SEWER LATERALS OUTSIDE OF TRAFFIC AREAS MAY HAVE A MINIMUM COVER OF 24". IF THESE CONDITIONS CANNOT BE MET DUE TO THE DEPTH OF EXISTING SERVICES, THE LATERAL SHALL BE CONSTRUCTED USING CLASS 350 DUCTILE IRON PIPE.

3. EXFILTRATION OR LOW PRESSURE AIR TESTING SHALL BE CONDUCTED BY THE CONTRACTOR ON SEWER LINES AND MANHOLES PER ADEQ ENGINEERING BULLETIN NUMBER 11. IN THE PRESENCE OF THE CITY OF WILLCOX INSPECTOR. EXFILTRATION AND INFILTRATION FROM MANHOLES IS LIMITED TO 0.1 GALLONS PER HOUR PER VERTICAL FOOT. LEAKAGE OF SEWER LINES SHALL NOT EXCEED 200 GALLONS/DAY/INCH DIAMETER/MILE OF PIPE. TESTING FOR FORCE MAINS HYDRO-TEST NEW PVC PIPE - FILL LINE; LET STAND UNDER SLIGHT PRESSURE FOR 48 HRS. THEN, BRING PRESSURE TO GREATER OF 125% OF WORKING PRESSURE OR 50 PSI OVER WORKING PRESSURE FOR 4 HRS.

MAXIMUM LEAKAGE= L=(JD√P)/4500
WHERE:
L=GPH MAXIMUM LEAKAGE
J=NUMBER OF JOINTS
P=TEST PRESSURE IN PSI
D=DIAMETER OF PIPE (INCHES)

4. SHORT TERM DEFLECTION TESTING OF AT LEAST 20% OF PVC SEWER PIPE MUST BE PERFORMED. SHORT TERM DEFLECTION IN EXCESS OF 5% SHALL BE CONSIDERED UNSERVICABLE AND SHALL BE REPAIRED AND RETESTED.

5. CLEAN-OUTS ARE TO BE CONSTRUCTED WITH PVC PIPE MATERIALS PER MAG STANDARD DETAIL 441. SERVICE CLEANOUTS SHALL BE INSTALLED WITH A TRAFFIC RATED COVER AT PROPERTY LINE AT FINISHED GRADE, OR AS SHOWN ON THESE PLANS.

6. THE ELEVATIONS SHOWN ON THE PLANS AND RESULTING SLOPES OF SEWER MAINS MUST BE VERIFIED BY THE CONTRACTOR WITH THE APPROPRIATE INSTRUMENTS, AND THE RESULTS SHALL BE SUBMITTED TO THE INSPECTOR AND THE CITY OF WILLCOX FOR APPROVAL PRIOR TO BACKFILL OF TRENCHES.

7. ALL CROSSINGS OF WATER MAINS AND SEWER MAINS MUST CONFORM TO CURRENT SEPARATION REQUIREMENTS OF R18-4-502 OF THE ARIZONA ADMINISTRATIVE CODE. ALL CROSSINGS OF SERVICE LINES MUST CONFORM TO CURRENT SEPARATION REQUIREMENTS OF THE UNIFORM PLUMBING CODE.

LOCATION MAP

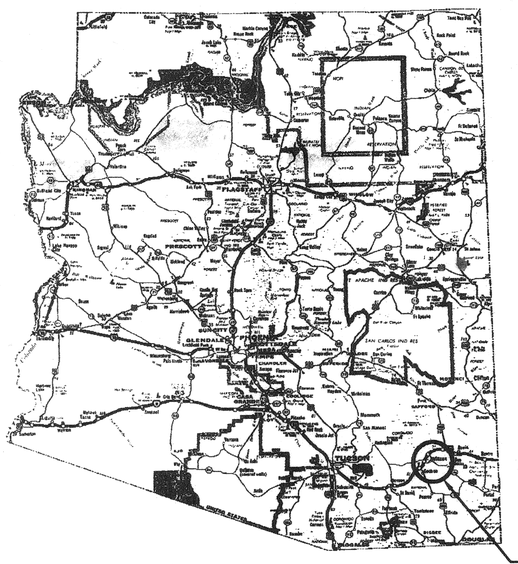

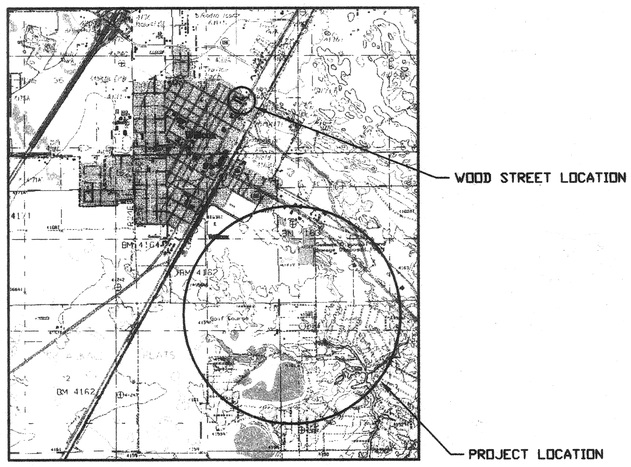

CITY OF WILLCOX

SHEET INDEX

1. ..... COVER
2. ..... INDEX
3. ..... NEW WOOD ST. LIFT STATION
4. ..... PLANT LAYOUT & FLOW PATTERN
5. ..... DISCHARGE PLAN & PROFILE
6. ..... DISCHARGE PLAN & PROFILE
7. ..... OUTLET PLAN & PROFILE
8. ..... INLET PLAN & PROFILES
9. ..... RENOVATION OF PONDS & BERMS
10. ..... MAIN LIFT STATION
11. ..... SEPTAGE RECEIVING STATION
12. ..... LABORATORY
13. ..... SITE ELECTRICAL CONDUIT SCHEMATIC
14. ..... LAB & LIFT STATION ELECTRICAL SCHEMATICS
15. ..... GOLF COURSE LAYOUT
16. ..... LAKE COCHISE LAYOUT
17. ..... GOLF COURSE INLET PLAN & PROFILE
18. ..... GOLF COURSE INLET PLAN & PROFILE
19. ..... BIO-REACTOR POND PIPING DETAILS
20. ..... BIO-PONDS CROSS-SECTIONS
21. ..... BIO-PONDS TRANSFER PLAN & PROFILE
22. ..... BIO PONDS TRANSFER PLAN & PROFILE
23. ..... EXISTING PONDS TRANSFER PLAN & PROFILE
24. ..... GOLF COURSE PUMP STATION
25. ..... GOLF COURSE PUMP STATION PIPING
26. ..... GOLF COURSE IRRIGATION SYSTEM
27. ..... LAKE COCHISE PUMP STATION
28. ..... DETAILS
29. ..... DETAILS
30. ..... DETAILS
31. ..... FORCE MAIN PLAN & PROFILE
32. ..... FORCE MAIN PLAN & PROFILE
33. ..... FORCE MAIN PLAN & PROFILE

CALL TWO WORKING DAYS BEFORE YOU DIG
263-1100
1-800-STAKE-IT
(OUTSIDE MARICOPA COUNTY)

REVISIONS

CITY OF WILLCOX
WASTEWATER
TREATMENT PLANT

TRUELINE ENGINEERING
LAND SURVEYING
CIVIL ENGINEERING
609 SOUTH FIFTH AVENUE
SAFFORD, ARIZONA 85546
(520) 428-1304 FAX 428-1879

COVER

3/31/00

DATE: JULY, 2000
JOB No.: 97020
DRAWN BY: L.K.P.

T:\Acd_proj\97020\WWTP\plans\COVER.dwg 06/30/2000 11:44:14 AM, HP1050C-MYLAR-L.pc3

WOOD STREET

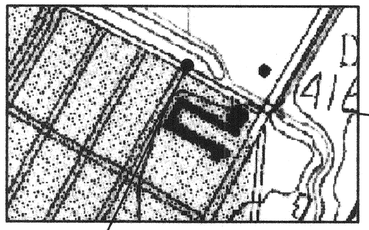

APPROXIMATE LIFT STATION LOCATION (WOOD ST. AND CURTIS AVE.)

SEE SHEET #3

TWIN LAKES GOLF COURSE

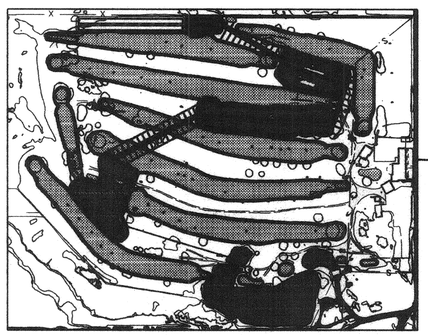

SEE SHEETS #15, #17 THROUGH #26

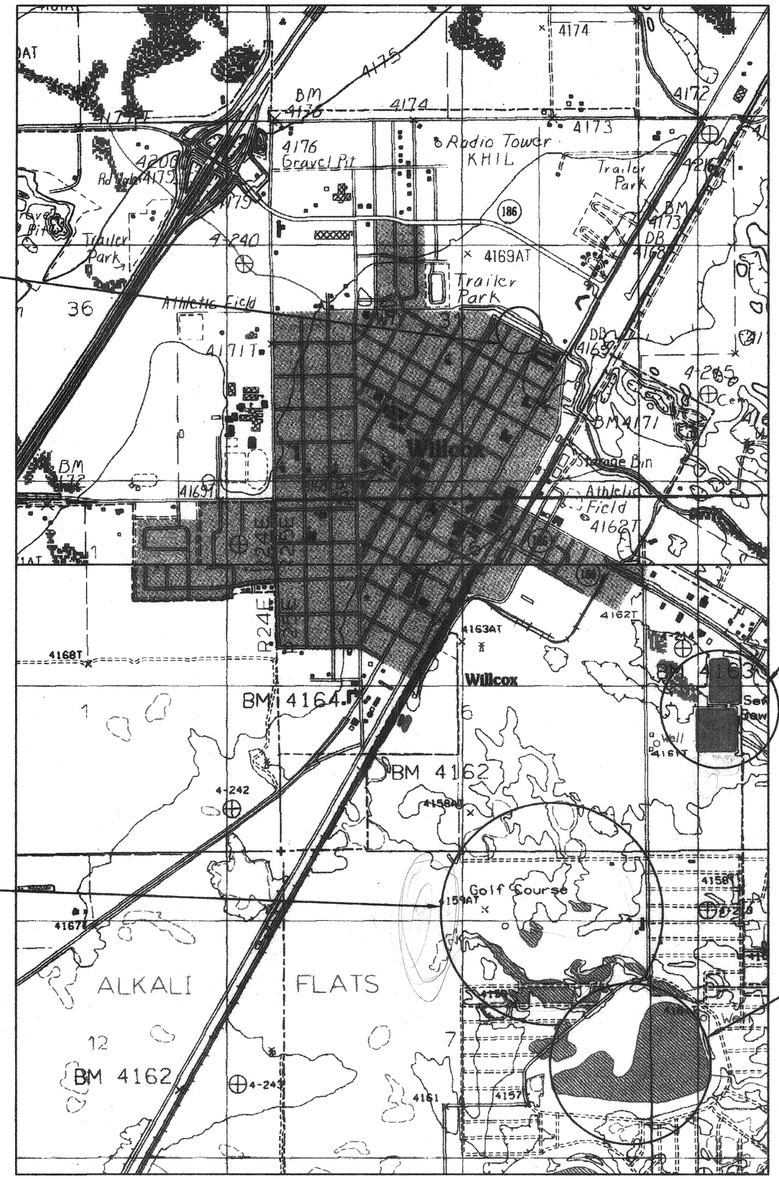

N.T.S.

EXISTING TREATMENT PLANT

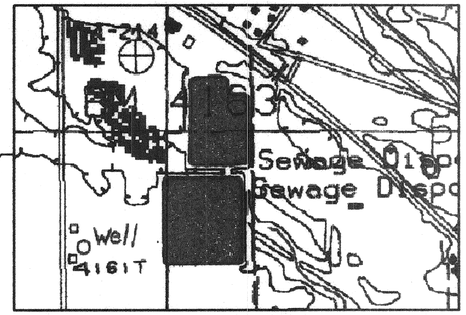

SEE SHEETS #4 THROUGH #14

LAKE COCHISE

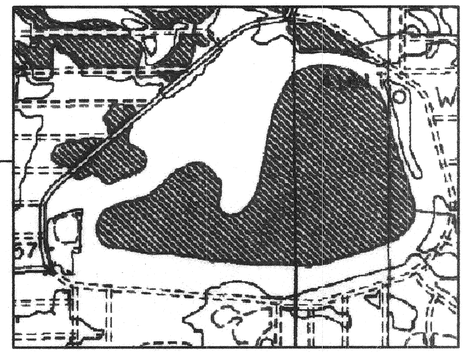

SEE SHEETS #16 AND #27

REVISIONS

CITY OF WILLCOX
WASTEWATER
TREATMENT PLANT

TRUELINE ENGINEERING
CIVIL ENGINEERING
609 SOUTH FIFTH AVENUE
SAFFORD, ARIZONA 85546
LAND SURVEYING
(928) 428-1504 FAX 428-1879

INDEX

8/31/00

DATE: JULY, 2000
JOB No.: 97020
DRAWN BY: L.K.P.

SHEET
2 OF 33

T:\Act_proj\97020\WWTP\plans\INDEX2.dwg, 08/30/2000 11:35:51 AM, HP1055C-MYLAR-J.pc3

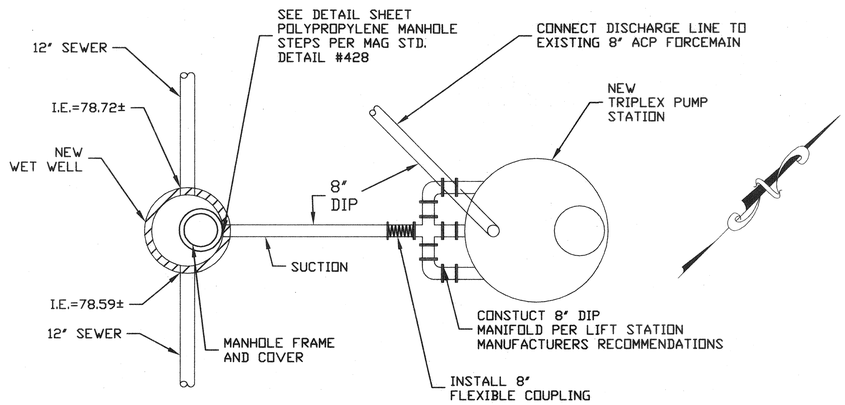

PLAN

SCALE 1"=5'

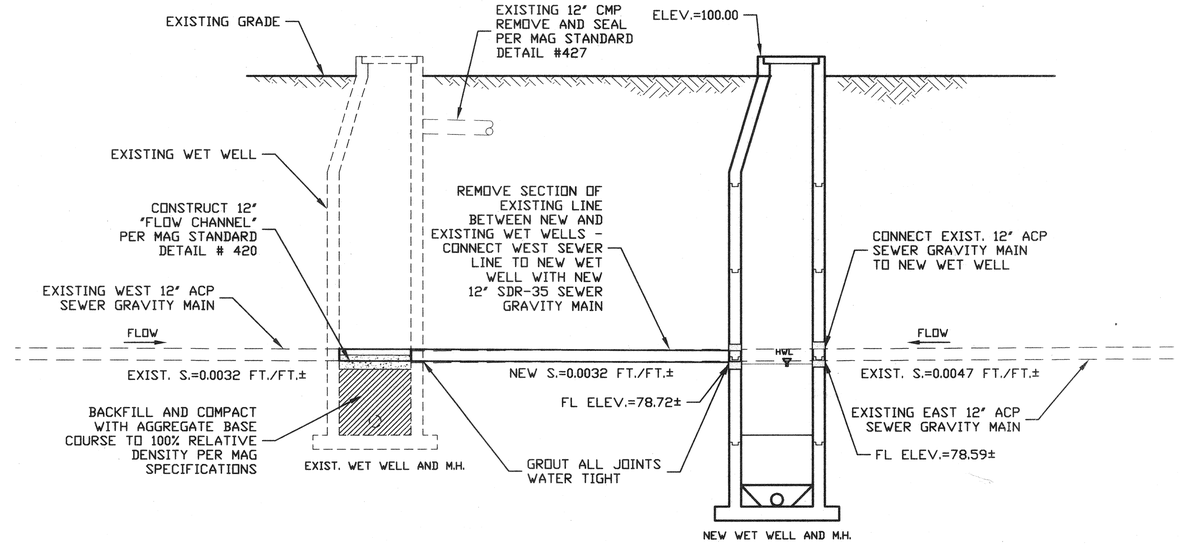

SECTION "A-A"

SCALE 1"=5'

NOTE:

OWNER/ENGINEER WILL FIELD LOCATE NEW FACILITIES

WETWELL WATER LEVEL CONTROL SETTINGS

ELEVATION	LEAD PUMP STATUS	LAG PUMP STATUS
79.00 EMERGENCY	ON	ON
78.00 HWL	ON	OFF
69.60 LWL	OFF	OFF

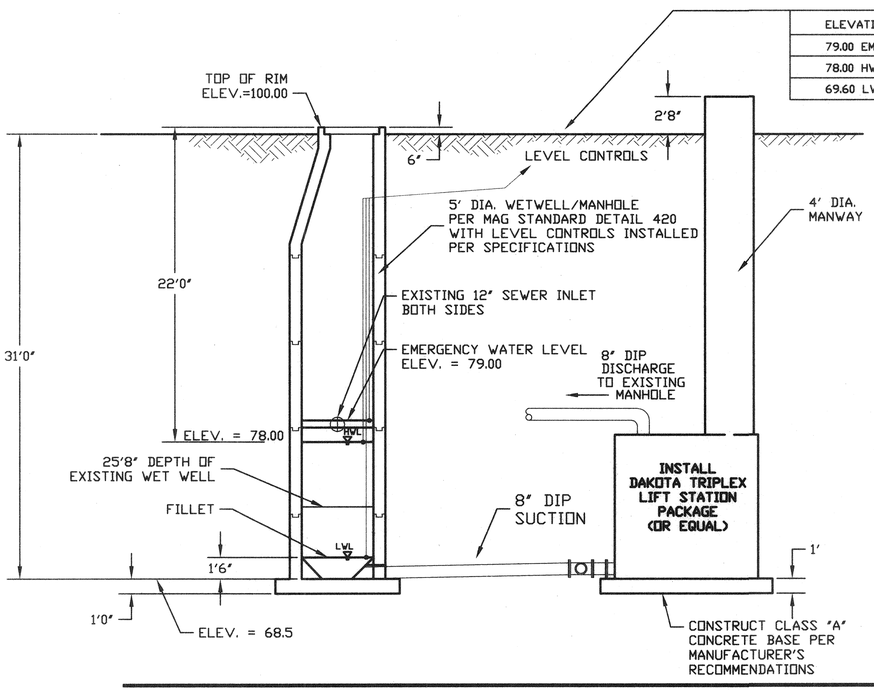

PROFILE SECTION "B-B"

SCALE 1"=5'

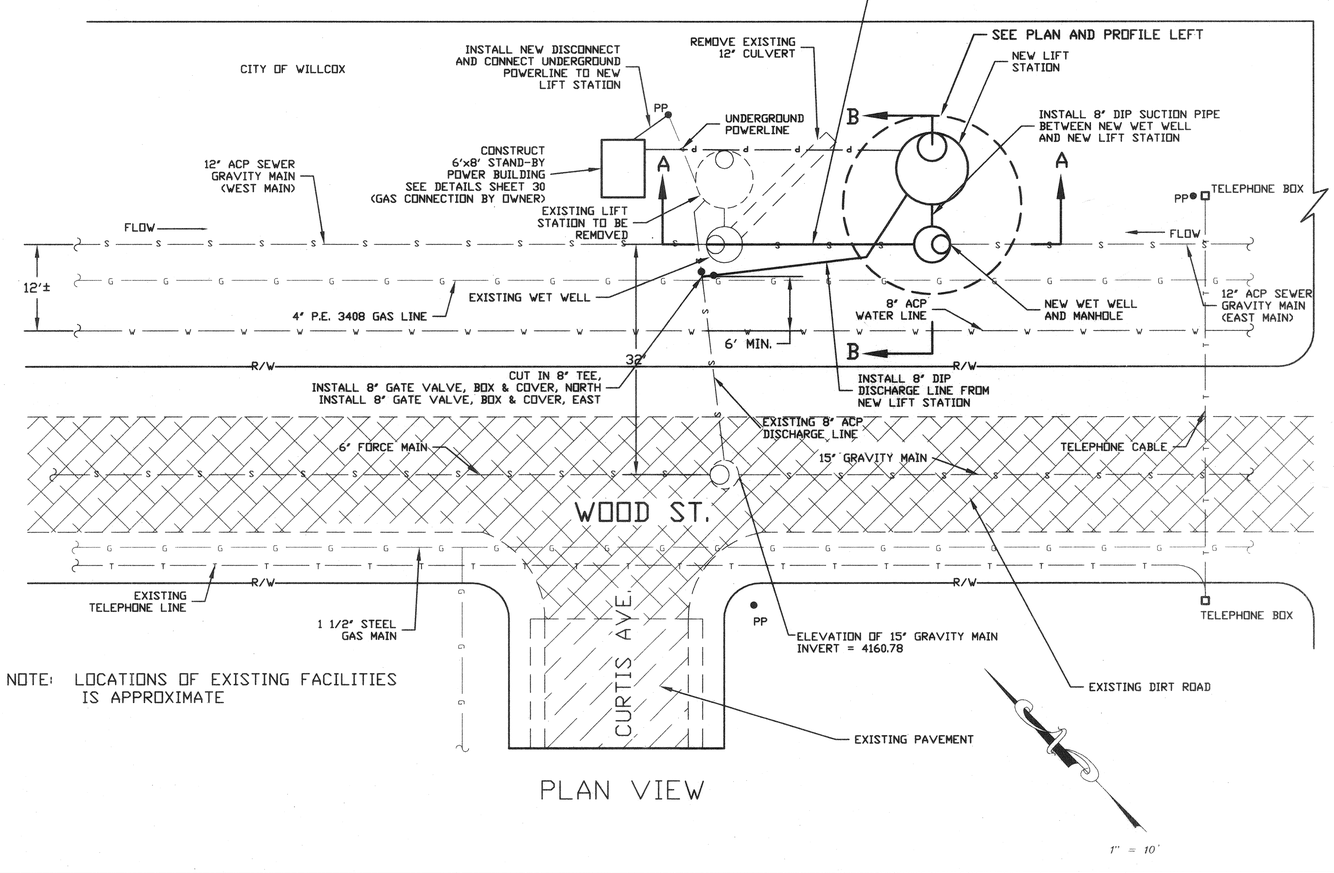

NOTE: LOCATIONS OF EXISTING FACILITIES IS APPROXIMATE

PLAN VIEW

REVISIONS

CITY OF WILLCOX WASTEWATER TREATMENT PLANT

TRUELINE ENGINEERING

CIVIL ENGINEERING
609 SOUTH FIFTH AVENUE
SAFFORD, ARIZONA 85546
(520) 428-1504 FAX 428-1978
LAND SURVEYING

NEW WOOD ST. LIFT STATION

DATE: OCTOBER, 2000
JOB No.: 97020
DRAWN BY: T.L.L.

SHEET
3 OF 33

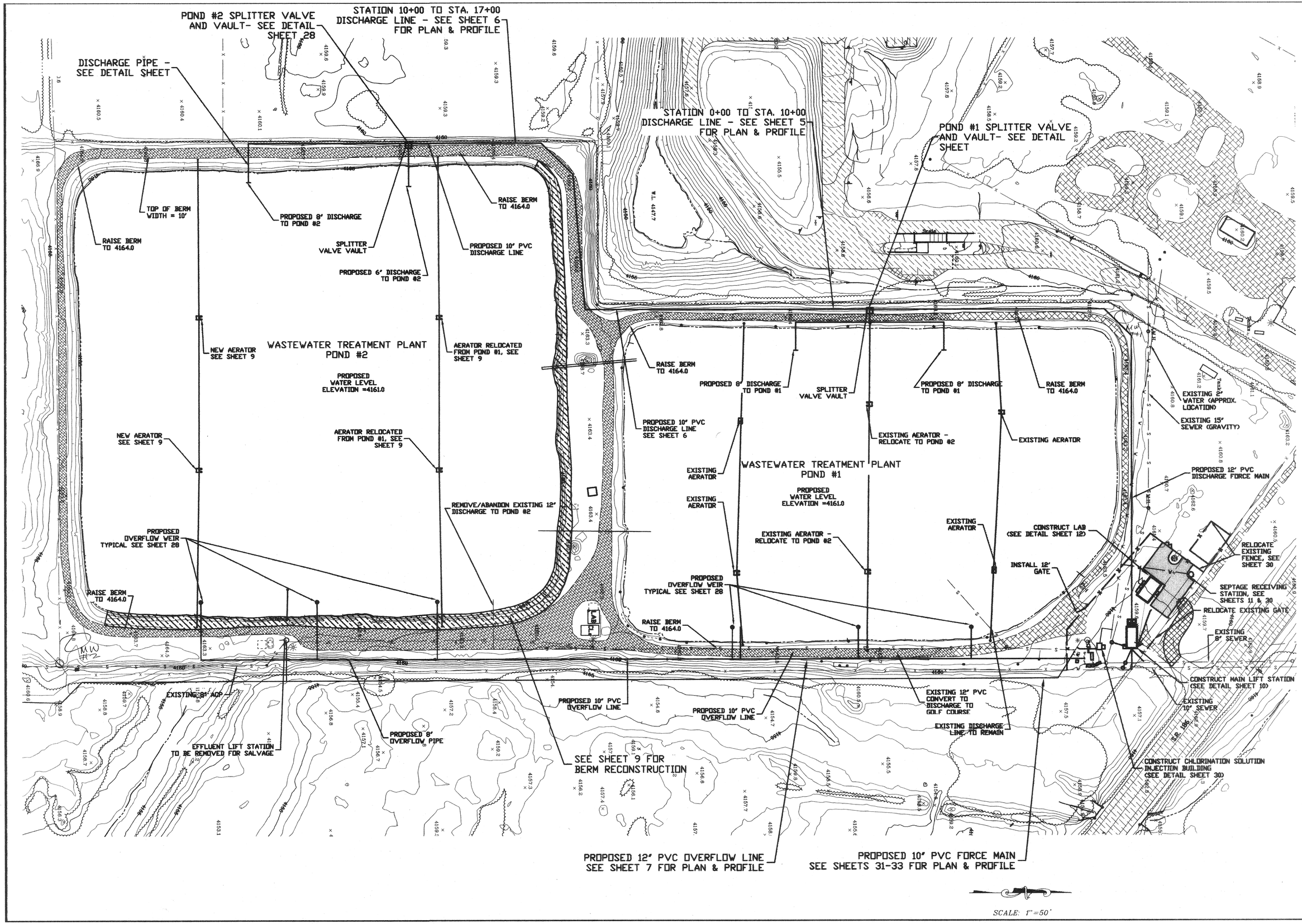

REVISIONS

CITY OF WILLCOX WASTEWATER TREATMENT PLANT

TRUELINE ENGINEERING
CIVIL ENGINEERING
609 SOUTH FIFTH AVENUE
SAFFORD, ARIZONA 85546
LAND SURVEYING
(520) 428-1504 FAX 428-1978

PLANT LAYOUT & FLOW PATTERN

DATE: NOV., 2000
JOB No.: 97020
DRAWN BY: L.K.P.

SHEET
4 OF 33

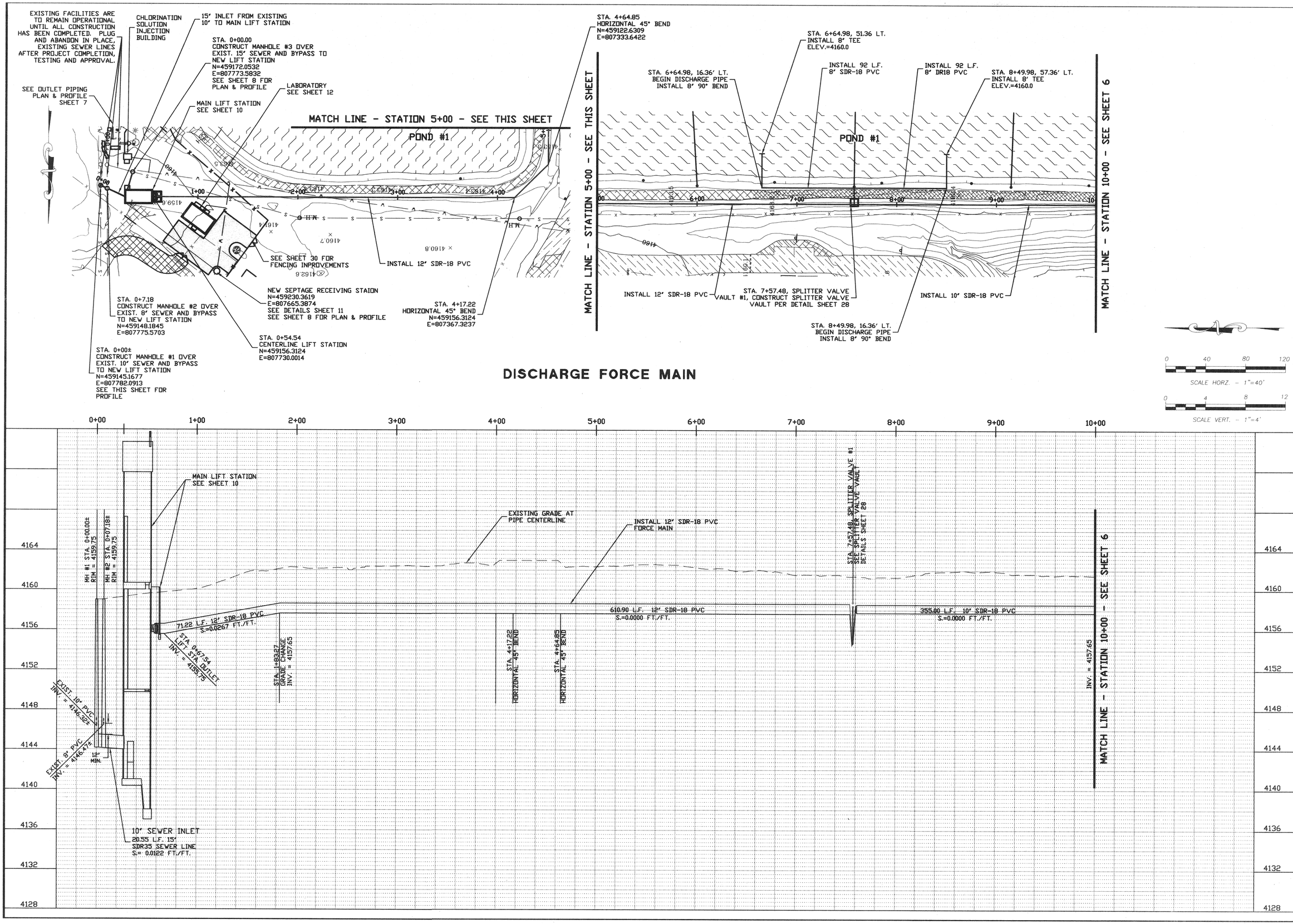

REVISIONS

CITY OF WILLCOX WASTEWATER TREATMENT PLANT

TRUELINE ENGINEERING
CIVIL ENGINEERING
609 SOUTH FIFTH AVENUE
SAFFORD, ARIZONA 85546
LAND SURVEYING
(520) 428-1504 FAX 428-1878

DISCHARGE PIPING PLAN & PROFILE

11/21/00

DATE: NOV., 2000
JOB No.: 97020
DRAWN BY: L.K.P.

SHEET 5 OF 33

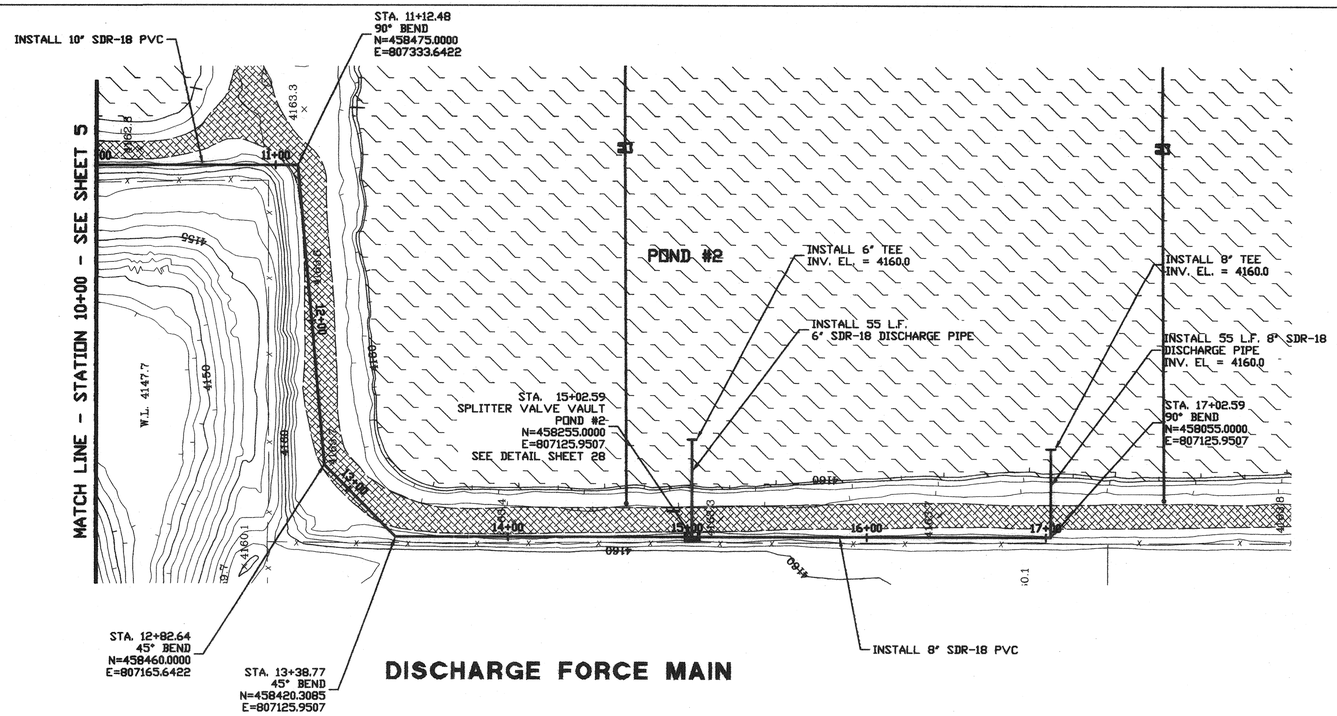

DISCHARGE FORCE MAIN

0 40 80 120
SCALE HORZ. - 1"=40'

0 4 8 12
SCALE VERT. - 1"=4'

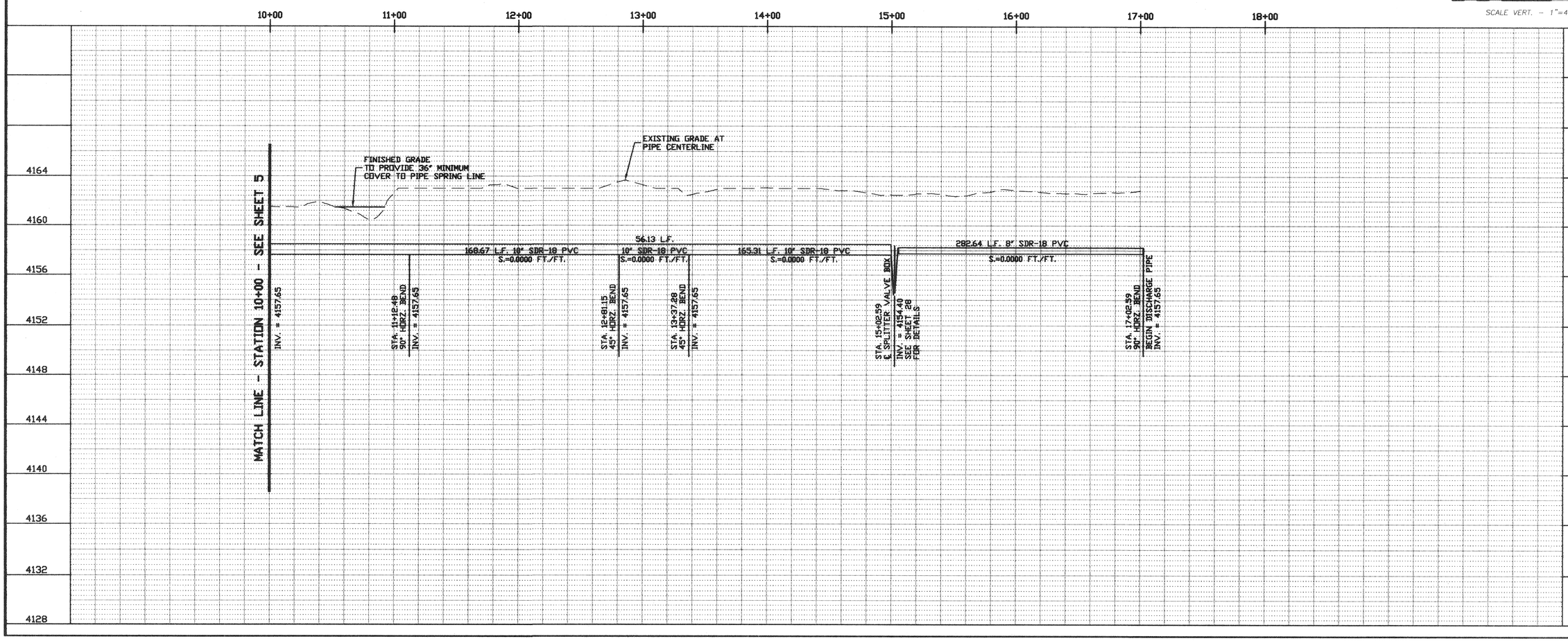

REVISIONS

CITY OF WILLCOX WASTEWATER TREATMENT PLANT

TRUELINE ENGINEERING
CIVIL ENGINEERING
609 SOUTH FIFTH AVENUE
SAFFORD, ARIZONA 85546
LAND SURVEYING
(928) 428-1504 FAX 428-1878

DISCHARGE PIPING PLAN & PROFILE

11/21/00

DATE: NOV., 2000
JOB No.: 97020
DRAWN BY: L.K.P.

SHEET
6 OF 33

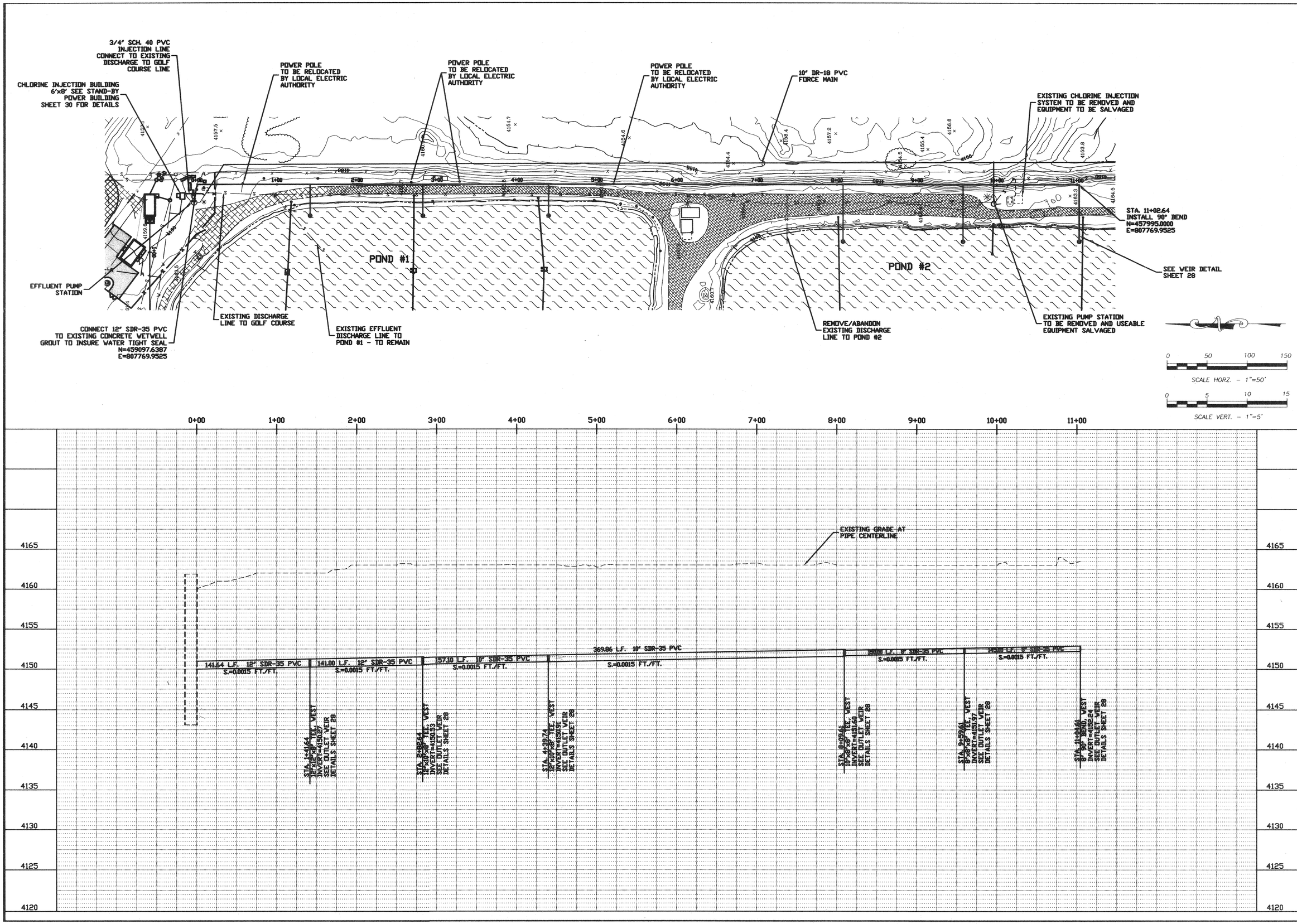

REVISIONS

CITY OF WILLCOX WASTEWATER TREATMENT PLANT

TRUELINE ENGINEERING
CIVIL ENGINEERING
609 SOUTH FIFTH AVENUE
SAFFORD, ARIZONA 85546
LAND SURVEYING
(520) 428-1304 FAX 428-1978

OUTLET PIPING PLAN & PROFILE

11/21/00

DATE: NOV., 2000
JOB No.: 97020
DRAWN BY: L.K.P.

SHEET
7 OF 33

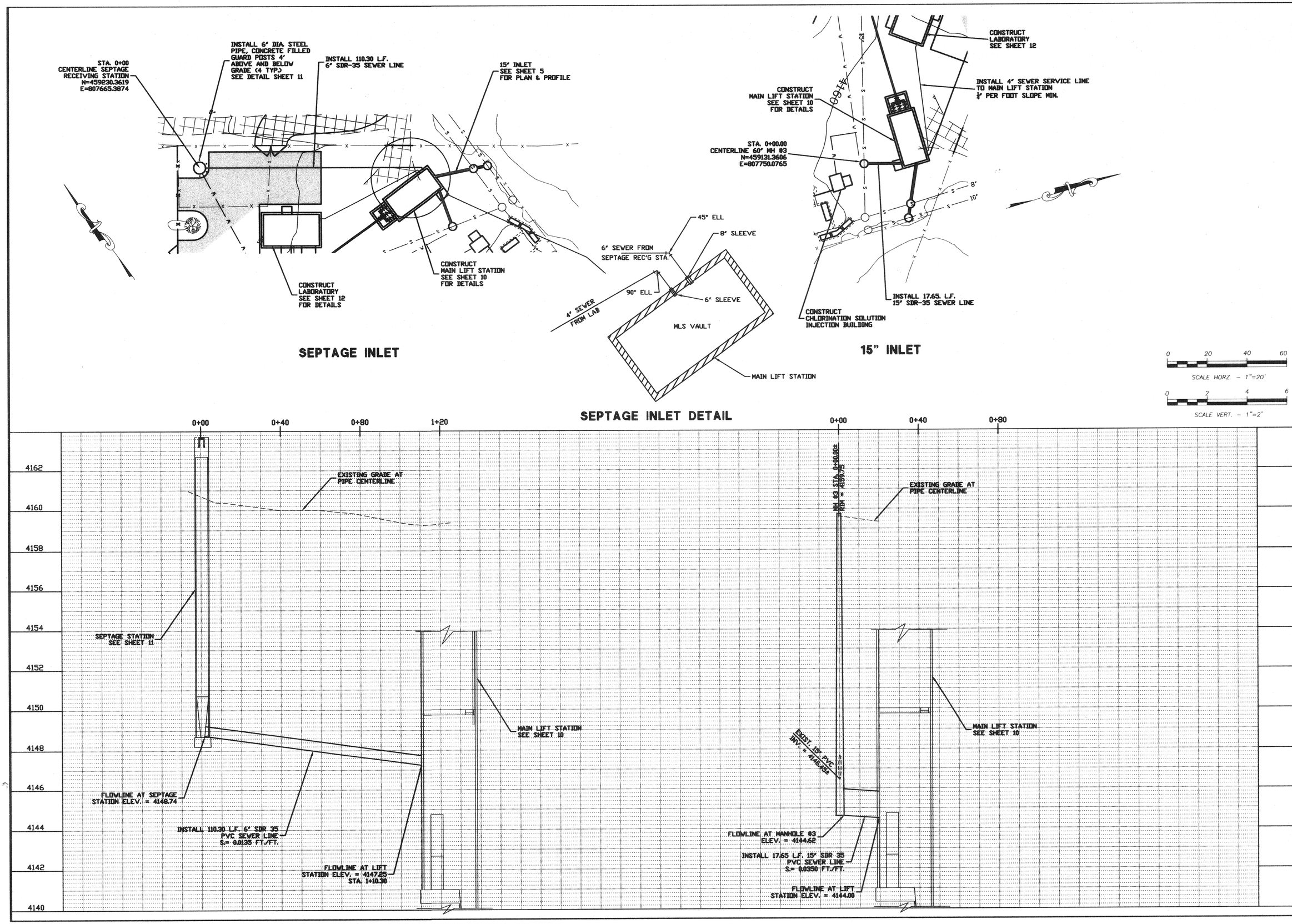

REVISIONS

CITY OF WILLCOX WASTEWATER TREATMENT PLANT

TRUELINE ENGINEERING
CIVIL ENGINEERING
609 SOUTH FIFTH AVENUE
SAFFORD, ARIZONA 85546
(520) 428-1504 FAX 428-1878
LAND SURVEYING

INLET PIPING PLAN & PROFILE

DATE: NOV., 2000
JOB No.: 97020
DRAWN BY: L.K.P.

SHEET
8 OF 33

150'±
300'±
150'±
185'±
185'±
185'±

INSTALL NEW AERATOR MOORING POSTS PER DETAIL THIS SHEET

RAISE POND BERM TO 4164.0

INSTALL NEW AERATOR MOORING POSTS PER DETAIL THIS SHEET

APPROXIMATE AREA OF POND BANK EROSION TO BE REPAIRED ACTUAL POND BANK REPAIRS SHALL BE DETERMINED IN THE FEILD BY ENGINEER (SEE DETAIL THIS SHEET)

RELOCATED AERATOR FROM POND #1

INSTALL NEW AERATOR

POND #2

RELOCATED AERATOR FROM POND #1

INSTALL NEW AERATOR

RAISE POND BERM TO 4164.0

APPROXIMATE AREA OF POND BANK EROSION TO BE REPAIRED ACTUAL POND BANK REPAIRS SHALL BE DETERMINED IN THE FEILD BY ENGINEER (SEE DETAIL THIS SHEET)

INSTALL NEW AERATOR MOORING POSTS PER DETAIL THIS SHEET

INSTALL NEW AERATOR MOORING POSTS PER DETAIL THIS SHEET

RAISE POND BERM TO 4164.0

W.L. 4147.7

CROSS-OVER PIPES TO REMAIN

RAISE POND BERM TO 4164.0

RAISE POND BERM TO 4164.0

REMOVE RELOCATE EXISTING AERATOR TO POND #2

POND #1

RAISE POND BERM TO 4164.0

REMOVE RELOCATE EXISTING AERATOR TO POND #2

RAISE POND BERM TO 4164.0

Scale

Tank

SCALE: 1"=50'

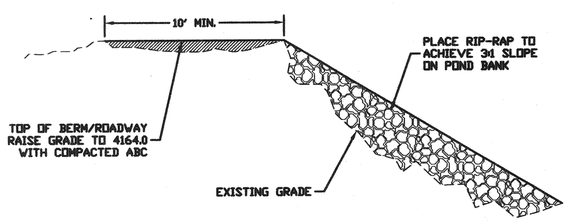

POND BANK REPAIR DETAIL

N.T.S.

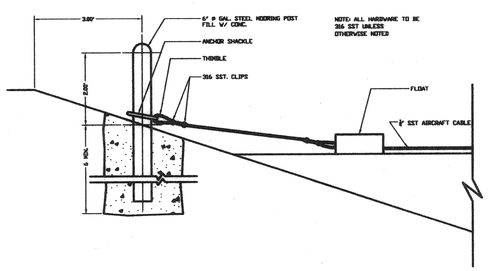

AERATOR MOORING

N.T.S.

REVISIONS

CITY OF WILLCOX WASTEWATER TREATMENT PLANT

TRUELINE ENGINEERING

CIVIL ENGINEERING
609 SOUTH FIFTH AVENUE
SAFFORD, ARIZONA 85546

LAND SURVEYING
(520) 428-1504 FAX 428-1878

RENOVATION OF POND & BERMS

11/21/00

DATE: NOV., 2000
JOB No.: 97020
DRAWN BY: C.D.C.

SHEET
9 OF 33

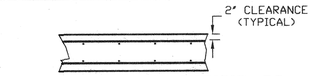

#5 @ 12" O.C. SHORT DIRECTION E.F.
#5 @ 12" O.C. LONG DIRECTION E.F.

VAULT LID
SCALE 1"= 2'

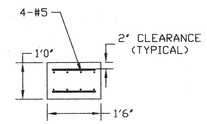

SPANDREL BEAM (D)
BETWEEN PUMP MAINTENANCE ACCESS GRATE & WALL
SCALE 1"= 2'

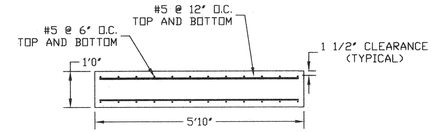

BEAM (C)
BETWEEN PUMP MAINTENANCE ACCESS GRATE & WALL
SCALE 1"= 2'

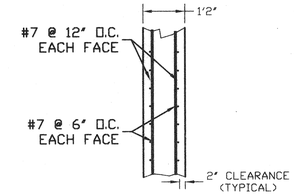

VAULT WALLS
SCALE 1"= 2'

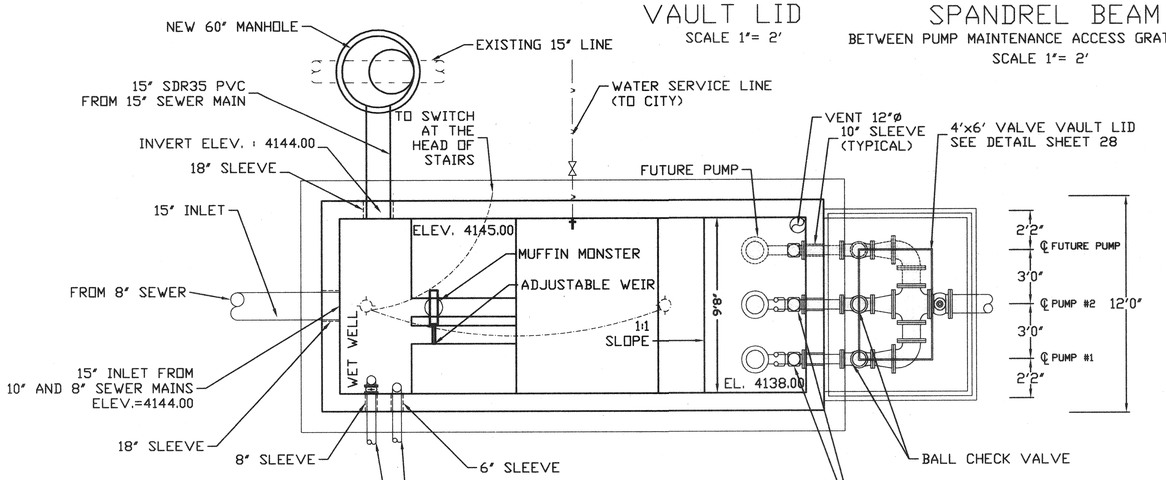

A I-BEAM: W6x12 A36 STEEL

B GRATING: 5' SPAN IN 24" PANELS
1-$\frac{1}{4}$"x$\frac{1}{4}$" BEARING BARS @ 1-$\frac{3}{16}$" SPACING AND CROSS BARS @ 4" O/C HOT DIPPED GALVANIZED AMICO #194 OR APPROVED EQUAL

FLOOR PLAN (PUMP LEVEL)
SCALE 1"= 4'

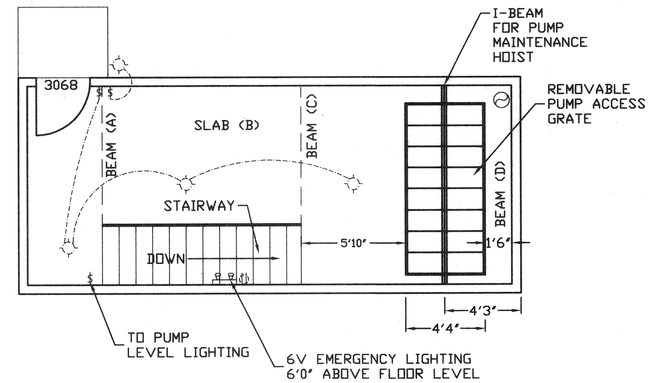

FLOOR PLAN (CONTROL LEVEL)
SCALE 1"= 4'

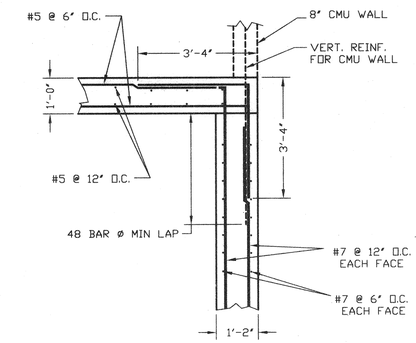

TYPICAL WALL/LID INTERSECTION
SCALE 1"= 2'

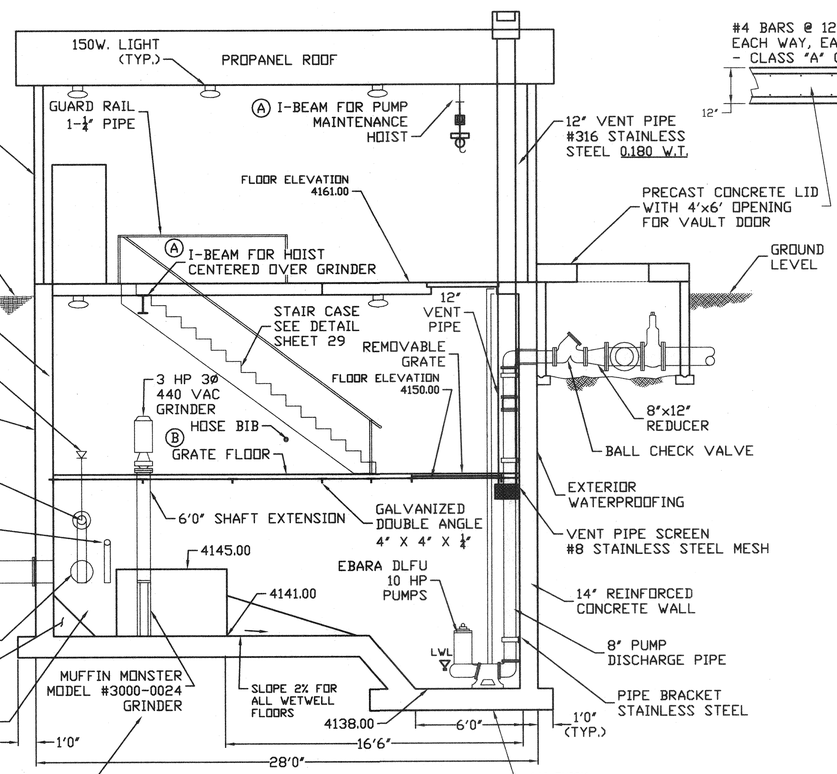

CONTROL SETTINGS

ELEVATION	GRINDER STATUS
4141.40	ON
4141.00	OFF

ELEVATION
SCALE 1"= 4'

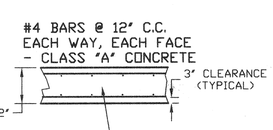

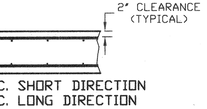

#7 @ 12" O.C. SHORT DIRECTION
#5 @ 12" O.C. LONG DIRECTION

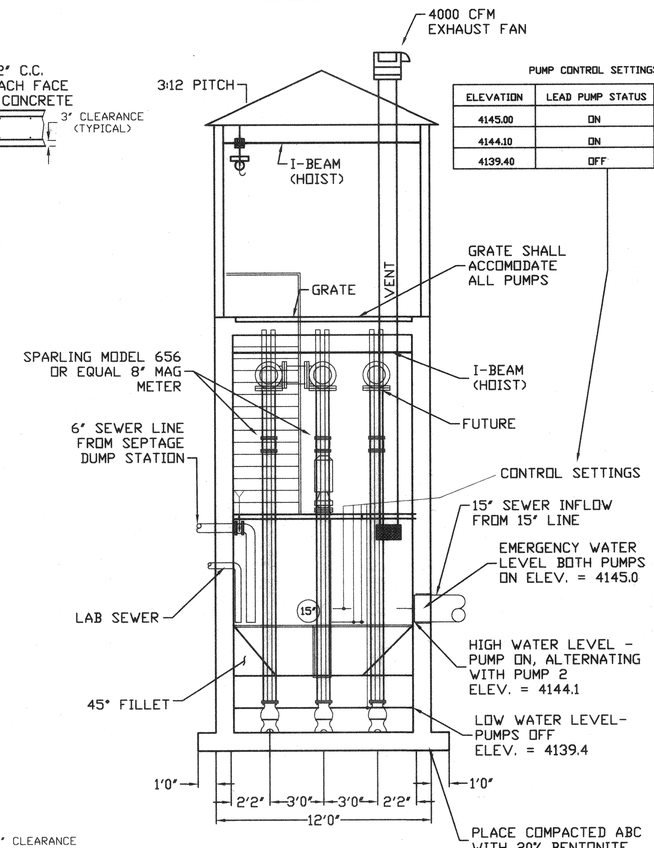

PUMP CONTROL SETTINGS

ELEVATION	LEAD PUMP STATUS	LAG PUMP STATUS
4145.00	ON	ON
4144.10	ON	OFF
4139.40	OFF	OFF

END ELEVATION
SCALE 1"= 4'

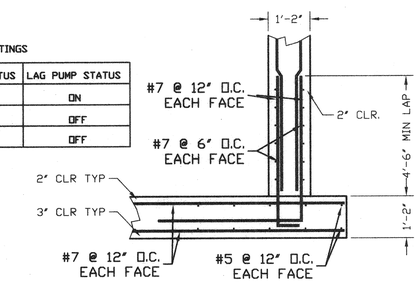

TYPICAL WALL/ FOUNDATION INTERSECTION
SCALE 1"= 2'

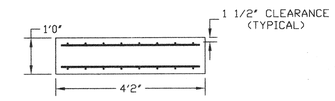

#5 @ 6" TOP & BOTTOM DIRECTION OF SPAN
#5 @ 12" TOP & BOTTOM LONG DIRECTION

BEAM (A)
BETWEEN WALL AND STAIRS
SCALE 1"= 2'

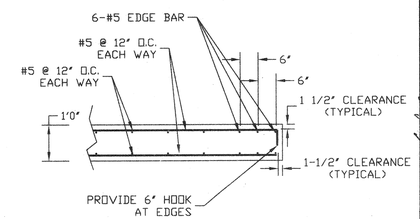

@ EDGE OF STAIRWAY USE
3-#5 CONTINUOUS TOP AND BOTTOM

SLAB (B)
SPANNING BETWEEN BEAMS PARALLEL TO STAIRS
SCALE 1"= 2'

REVISIONS

CITY OF WILLCOX WASTEWATER TREATMENT PLANT

TRUELINE ENGINEERING
LAND SURVEYING
CIVIL ENGINEERING
609 SOUTH FIFTH AVENUE
SAFFORD, ARIZONA 85546
(520) 428-1594 FAX 428-1878

MAIN LIFT STATION

DATE: NOV., 2000
JOB No.: 97020
DRAWN BY: T.L.

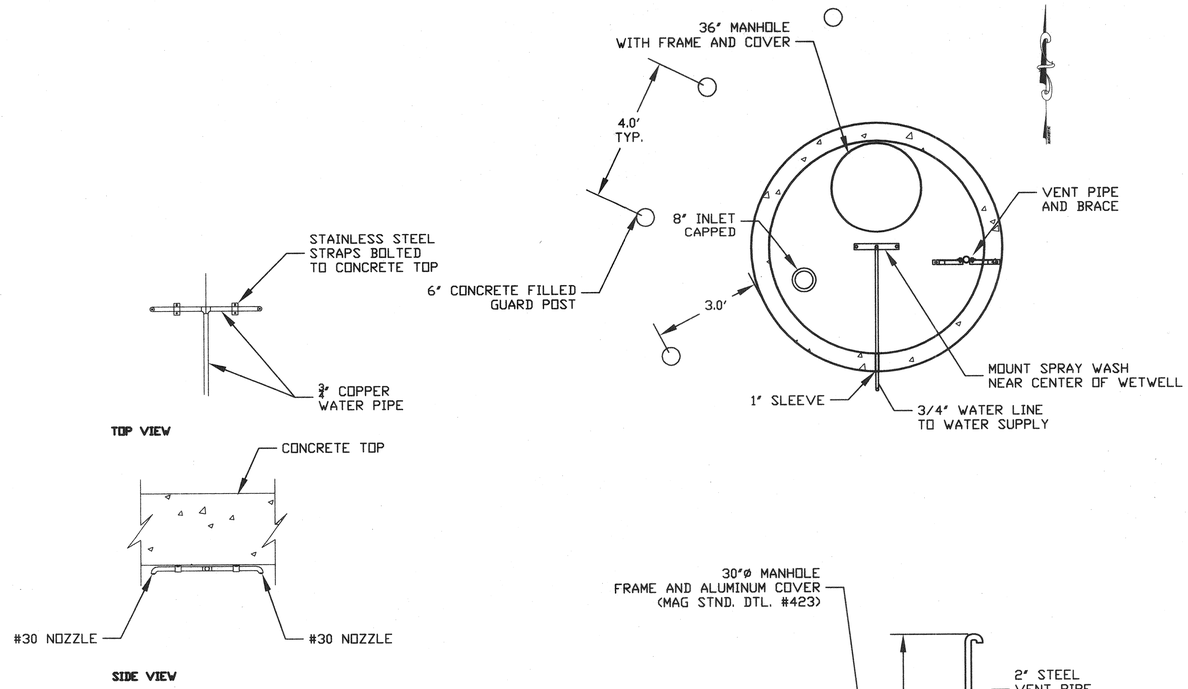

SPRAY WASH DETAIL

SCALE 1"= 1'

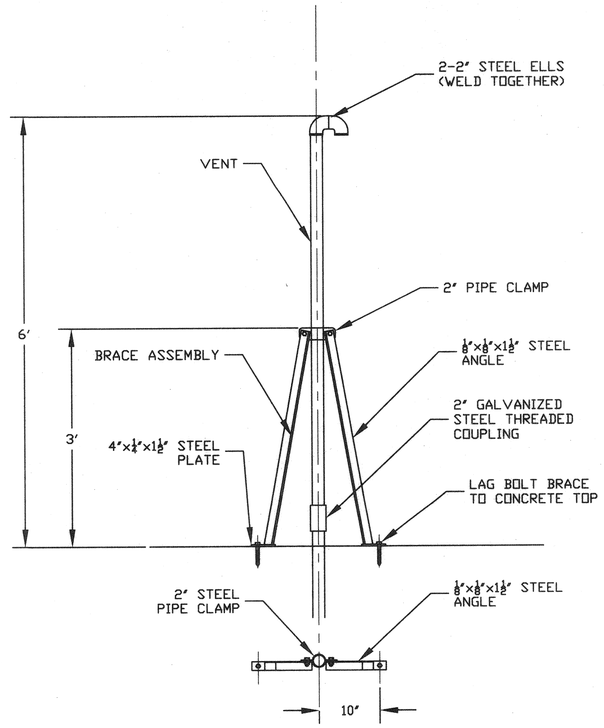

VENT PIPE & BRACE DETAIL

SCALE 1"= 1'

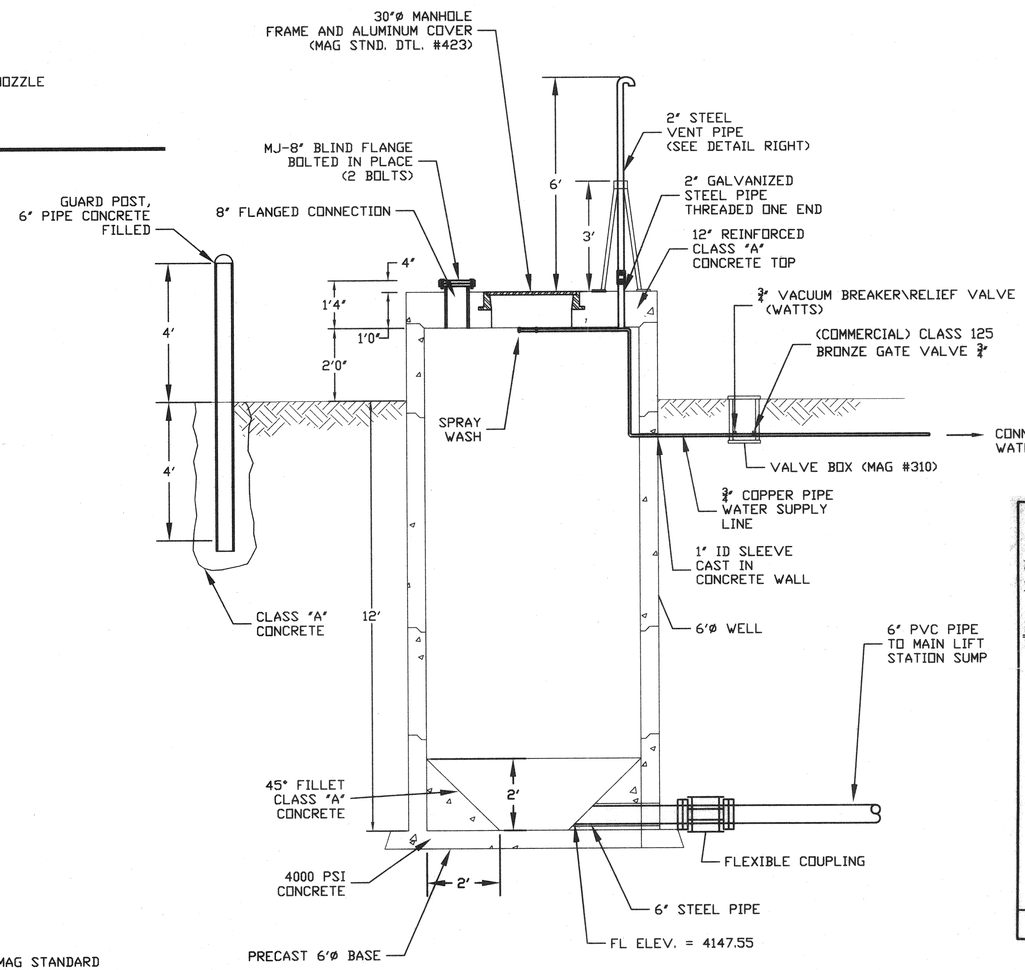

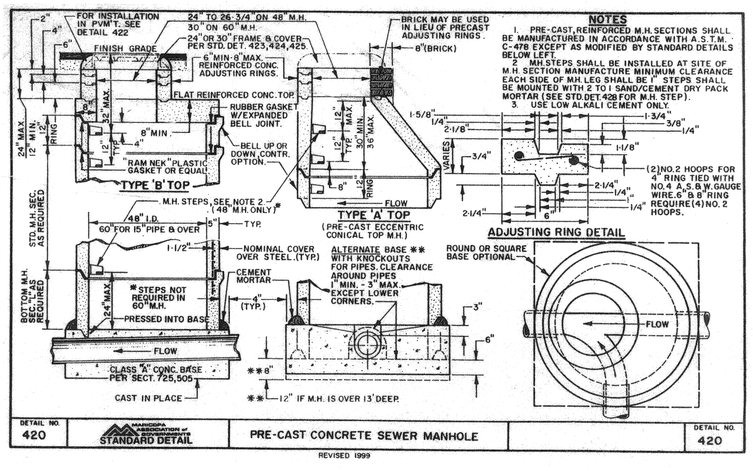

VOLUME CALCULATION

H = 14'
DIA. = 6'

CYLINDER VOLUME = 395.8 CU. FT.
FILLET VOLUME = 30.4 CU. FT.

VOLUME OF WET WELL = 365.4 CU. FT.

~2734 GALLONS

NOTE:

PAINT EXPOSED STEEL AS SPECIFIED IN MAG STANDARD SPECIFICATION 530 WITH COLOR SPECIFIED BY THE ENGINEER

REVISIONS

CITY OF WILLCOX
WASTEWATER
TREATMENT PLANT

TRUELINE ENGINEERING
CIVIL ENGINEERING
609 SOUTH FIFTH AVENUE
SAFFORD, ARIZONA 85546
(520) 428-1504 FAX 428-1878
LAND SURVEYING

SEPTAGE RECEIVING
STATION

REGISTERED PROFESSIONAL ENGINEER
W. GREG LORANG
11/1/00
ARIZONA

DATE: NOV., 2000
JOB No.: 97020
DRAWN BY: C.D.C.

SHEET
11 OF 33

T:\Act_proj\97020\WWTP\plans\SEPTAGE\F2.dwg, 11/20/00 04:32:54 PM, HP1050C-MYLAR-L.pc3

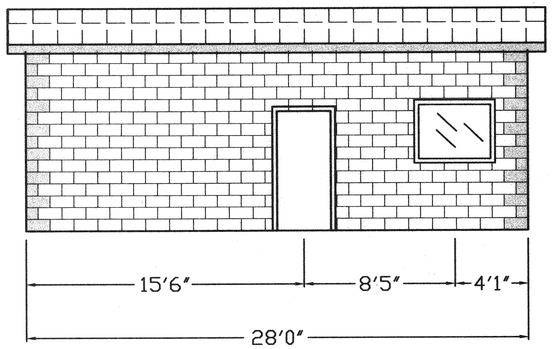

NORTH ELEVATION

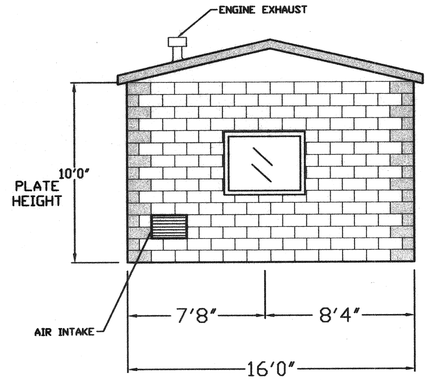

EAST ELEVATION

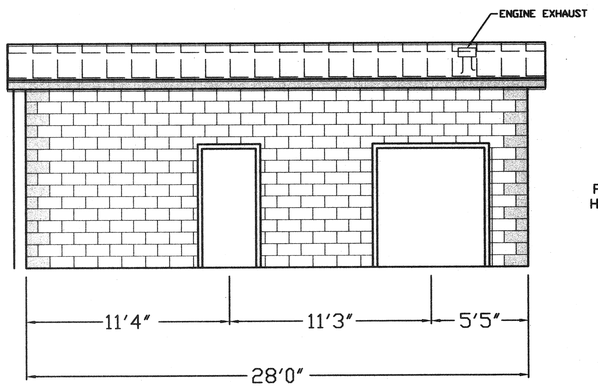

SOUTH ELEVATION

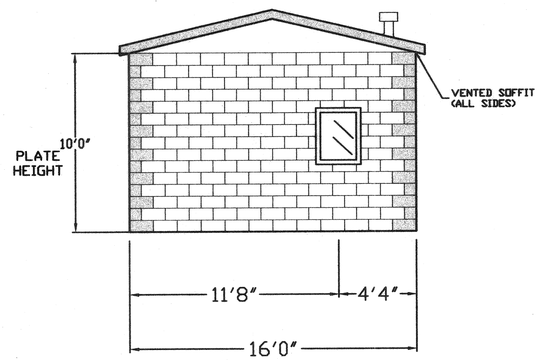

WEST ELEVATION

NOTE:

FOUNDATION, BOND BEAM, MATERIALS, INSULATION, ETC. SAME AS STAND-BY POWER BUILDING SEE SHEET 30

SCALE 1"= 4'

INTERIOR FIXTURE SCHEDULE

ALL INTERIOR FIXTURES SHALL BE COMMERCIAL GRADE

1. CORNER BASE CABINET WITH SINGLE DOOR AND SHELVES.
2. SINK BASE CABINET WITH SINGLE DOOR AND SHELVES.
3. BASE CABINET WITH DOORS AND SHELVES.
4. WALL CABINET WITH DOORS AND SHELVES.
5. CORNER WALL CABINET WITH DOORS AND SHELVES.

3068 EXTERIOR DOOR - STEEL 1-3/4" WITH LOCKING HARDWARE

3068 INTERIOR DOOR - STEEL 1-1/4" WITH PASSAGE HARDWARE AND LOUVERED VENT (12"x18")

4030 WINDOW - DOUBLE PANE, LOW-E, SINGLE HUNG

2028 WINDOW - DOUBLE PANE, LOW-E, SINGLE HUNG

WATER HEATER - ELECTRIC 40 GAL. QUICK RECOVERY

HVAC - ELECTRIC HEAT PUMP

ADA FIXTURES

WATER CLOSET

SINK (WASH BASIN)

GRAB BARS (AS REQUIRED FOR COMPLIANCE)

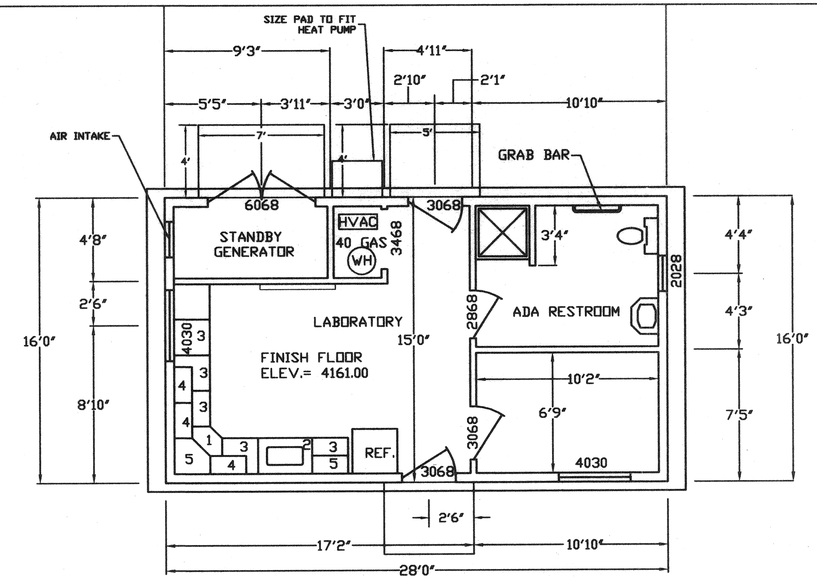

FLOOR PLAN

SCALE: 1/4" = 1'

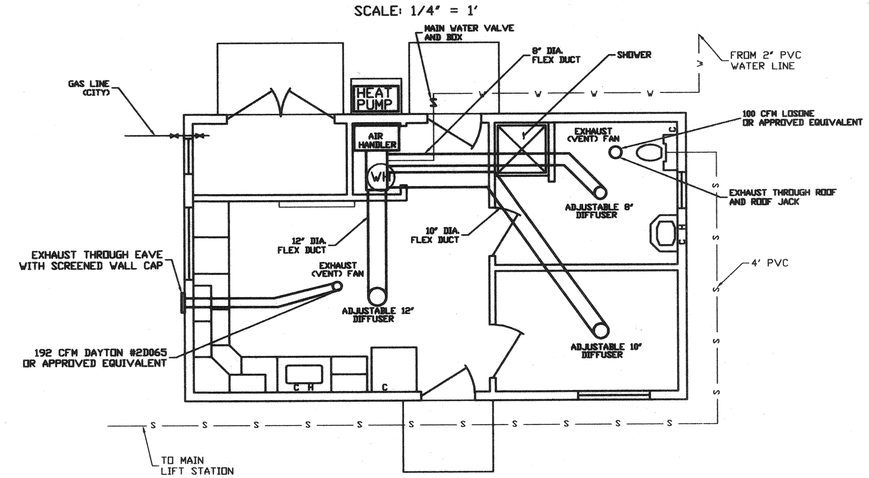

HVAC & PLUMBING

SCALE: 1/4" = 1'

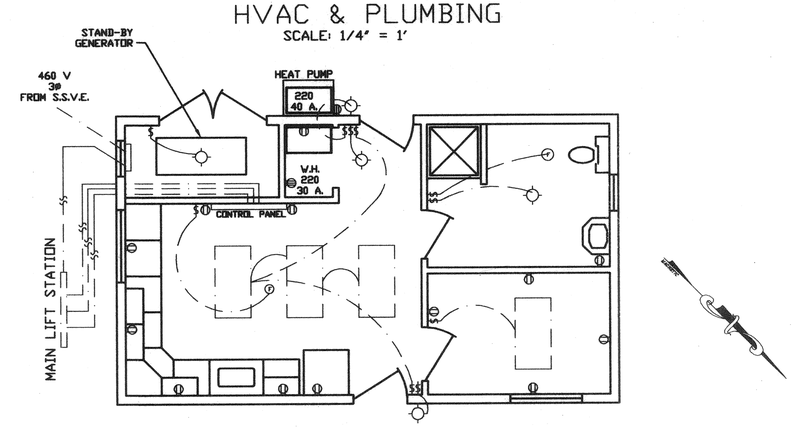

ELECTRICAL

SCALE: 1/4" = 1'

REVISIONS

CITY OF WILLCOX
WASTEWATER TREATMENT PLANT

TRUELINE ENGINEERING
CIVIL ENGINEERING
609 SOUTH FIFTH AVENUE
LAND SURVEYING
(928) 428-1504 FAX 428-1978
SAFFORD, ARIZONA 85546

LABORATORY/ CONTROL ROOM

DATE: NOV., 2000
JOB No.: 97020
DRAWN BY: L.K.P.

SHEET
12 OF 33

T:\Act_pro\97020\WWTP\plans\LAB-EXHIBIT.dwg, 11/20/00 04:33:26 PM, HP1050C-MYLAR-L.pc3

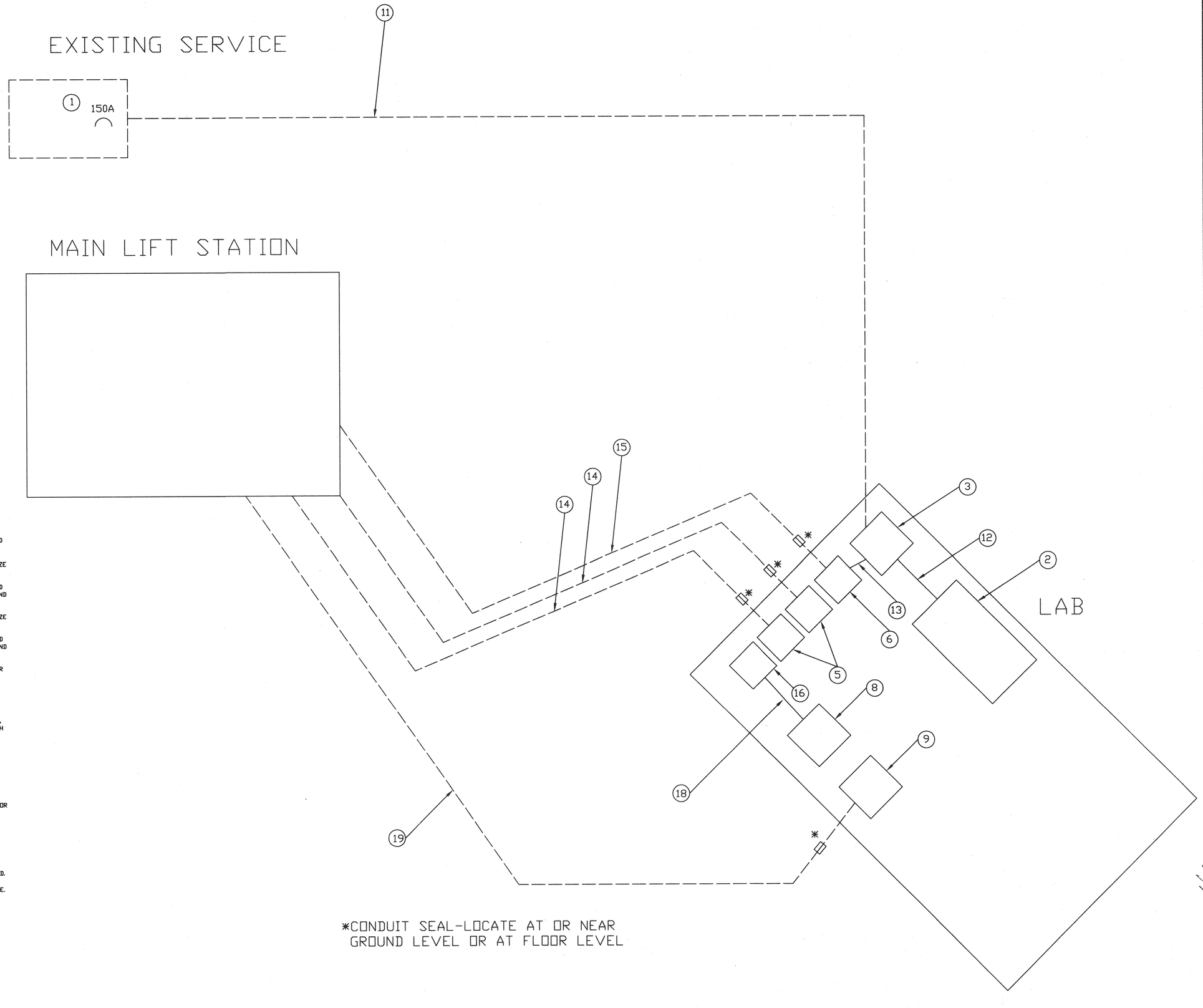

*CONDUIT SEAL-LOCATE AT OR NEAR GROUND LEVEL OR AT FLOOR LEVEL

EQUIPMENT LIST

1 150 AMP MOLDED CASE CIRCUIT BREAKER, 3-POLE, 480 VAC, CUTLER-HAMMER #FDB3150 (OR APPROVED EQUIVALENT), IN\OUT CABLE LUGS, ENCLOSURE #RFDN150 (NEMA 3R) OR APPROVED EQUIVALENT.

2 STANDBY GENERATOR ONAN #35GGFB OR APPROVED EQUIVALENT, 480/277 VOLT, 3-PHASE, 60 Hz, NATURAL GAS. CIRCUIT BREAKER TO BE MOUNTED ON THE GENERATOR SKID IN A NEMA I ENCLOSURE.

3 MANUAL TRANSFER SWITCH, 200 AMP, 3-POLE, 480 VOLTS, NEMA I ENCLOSURE, SQUARE D #DT364UGK OR APPROVED EQUIVALENT.

4 WIREWAY, 2-$\frac{1}{2}$" BY 2-$\frac{1}{2}$" BY 48", SQUARE D #LD24 OR APPROVED EQUIVALENT.

5 COMBINATION MOTOR STARTER WITH CIRCUIT BREAKER, NEMA SIZE 1, 480 VOLT, NEMA I ENCLOSURE, 10 HP, 120 VOLT CONTROL VOLTAGE, SQUARE D #SCG44V06 OR APPROVED EQUIVALENT, COMPLETE WITH MELTING ALLOY THERMAL OVERLOAD RELAY SIZED AT 125%, COMPLETE WITH H-O A SELECTOR SWITCH (FORM C) AND RED INDICATING LIGHT.

6 COMBINATION MOTOR STARTER WITH CIRCUIT BREAKER, NEMA SIZE 1, 480 VOLT, NEMA I ENCLOSURE, 3 HP, 120 VOLT CONTROL VOLTAGE, SQUARE D #SCG44V06 OR APPROVED EQUIVALENT, COMPLETE WITH MELTING ALLOY THERMAL OVERLOAD RELAY SIZED AT 125%, COMPLETE WITH H-O A SELECTOR SWITCH (FORM C) AND RED INDICATING LIGHT.

7 STOP/LOCKOUT, EXPLOSION PROOF, CROUSE-HINDS #EDS1184. OR APPROVED EQUIVALENT.

8 DRY TYPE TRANSFORMER, GENERAL PURPOSE, SINGLE PHASE 25kVA, 480v - 120/240v, CUTLER-HAMMER #S48G11S25N OR APPROVED EQUIVALENT.

9 LOAD CENTER, SINGLE PHASE, 3 WIRE 120/240 VOLT, 125 AMP, CUTLER-HAMMER #BR1624B125SN OR APPROVED EQUIVALENT, WITH 100 AMP MAIN CIRCUIT BREAKER, WITH 6-20 AMP SINGLE POLE BRANCH CIRCUIT BREAKERS, 1-50 AMP 2-POLE BRANCH CIRCUIT BREAKER.

10 CONTACTOR, 230 VAC, 480 VOLT VAC COIL, SQUARE D #DPA52-V06 OR APPROVED EQUIVALENT, NEMA I ENCLOSURE.

11 2" CONDUIT WITH 3 #2/0, AND 1 #6 GROUND.

12 $\frac{3}{4}$" CONDUIT WITH 3 #6 AND 1 #10 GROUND FOR 35 kW GENERATOR

13 2" CONDUIT WITH 3 #2/0, AND 1 #6 GROUND.

14 $\frac{3}{4}$" CONDUIT WITH #12 FOR MOTOR AND 2 #14 FOR S/L AND 2 #14 FOR LEVEL CONTROL AND 1 #12 GROUND.

15 $\frac{3}{4}$" CONDUIT WITH 3 #12 AND 2 #14 FOR S/L AND 1 #12 GROUND.

16 60 AMP MOLDED CASE CIRCUIT BREAKER WITH NEMA I ENCLOSURE. 480 VOLT, 2-POLE CUTLER-HAMMER #EHD2060, ENCLOSURE #SFDN100 OR APPROVED EQUIVALENTS.

17 $\frac{3}{4}$" CONDUIT WITH 2 #6 AND 1 #10 GROUND.

18 1-1/4" CONDUIT WITH 3 #1 AND 1 #8 GROUND.

19 $\frac{3}{4}$" CONDUIT WITH 3 #12 AND 1 #12 GROUND.

20 $\frac{3}{4}$" CONDUIT WITH 2 #6 AND 1 #10 GROUND.

21 $\frac{3}{4}$" CONDUIT WITH 2 #12 AND 1 #12 GROUND.

REVISIONS

CITY OF WILLCOX
WASTEWATER
TREATMENT PLANT

TRUELINE ENGINEERING
CIVIL ENGINEERING
609 SOUTH FIFTH AVENUE
SAFFORD, ARIZONA 85546
LAND SURVEYING
(520) 428-1504 FAX 428-1878

SITE ELECTRICAL
CONDUIT SCHEMATIC

11/21/00

DATE: NOV., 2000
JOB No.: 97020
DRAWN BY: C.D.C.

T:\Act_proj\97020\WWTP\plans\SITESCHEM.dwg, 11/20/00 04:31:49 PM, HP1050C-MYLAR-L.pc3

SYMBOLS

- TRANSFORMER
- CIRCUIT BREAKER
- MOTOR STARTER W/ HAND-OFF-AUTO SELECTOR SWITCH
- SYNCH. GENERATOR, AC
- CONTACT OR CONTACTOR
- 10 HORSEPOWER MOTOR
- STOP/LOCKOUT PUSH BUTTON
- CONTROL COIL

EQUIPMENT LIST

1 150 AMP MOLDED CASE CIRCUIT BREAKER, 3-POLE, 480 VAC, CUTLER-HAMMER #FD3315O (OR APPROVED EQUIVALENT), IN\OUT CABLE LUGS, ENCLOSURE #RFDN15O (NEMA 3R) OR APPROVED EQUIVALENT.

2 STANDBY GENERATOR ONAN #35GGFB OR APPROVED EQUIVALENT, 480/277 VOLT, 3-PHASE, 60 Hz, NATURAL GAS. CIRCUIT BREAKER TO BE MOUNTED ON THE GENERATOR SKID IN A NEMA I ENCLOSURE.

3 MANUAL TRANSFER SWITCH, 200 AMP, 3-POLE, 480 VOLTS, NEMA I ENCLOSURE, SQUARE D #DT364UGK OR APPROVED EQUIVALENT.

4 WIREWAY, 2-$\frac{1}{2}$" BY 2-$\frac{1}{2}$" BY 48", SQUARE D #LD24 OR APPROVED EQUIVALENT.

5 COMBINATION MOTOR STARTER WITH CIRCUIT BREAKER, NEMA SIZE 1, 480 VOLT, NEMA I ENCLOSURE, 10 HP, 120 VOLT CONTROL VOLTAGE, SQUARE D #SCG44VO6 OR APPROVED EQUIVALENT, COMPLETE WITH MELTING ALLOY THERMAL OVERLOAD RELAY SIZED AT 125%, COMPLETE WITH H-O A SELECTOR SWITCH (FORM C) AND RED INDICATING LIGHT.

6 COMBINATION MOTOR STARTER WITH CIRCUIT BREAKER, NEMA SIZE 1, 480 VOLT, NEMA I ENCLOSURE, 3 HP, 120 VOLT CONTROL VOLTAGE, SQUARE D #SCG44VO6 OR APPROVED EQUIVALENT, COMPLETE WITH MELTING ALLOY THERMAL OVERLOAD RELAY SIZED AT 125%, COMPLETE WITH H-O A SELECTOR SWITCH (FORM C) AND RED INDICATING LIGHT.

7 STOP/LOCKOUT, EXPLOSION PROOF, CROUSE-HINDS #EDS1184. OR APPROVED EQUIVALENT.

8 DRY TYPE TRANSFORMER, GENERAL PURPOSE, SINGLE PHASE 25kVA, 480v - 120/240v, CUTLER-HAMMER #S48G11S25N OR APPROVED EQUIVALENT.

9 LOAD CENTER, SINGLE PHASE, 3 WIRE 120/240 VOLT, 125 AMP, CUTLER-HAMMER #BR1624B125SN OR APPROVED EQUIVALENT, WITH 100 AMP MAIN CIRCUIT BREAKER, WITH 6-20 AMP SINGLE POLE BRANCH CIRCUIT BREAKERS, 1-50 AMP 2-POLE BRANCH CIRCUIT BREAKER.

10 CONTACTOR, 230 VAC, 480 VOLT VAC COIL, SQUARE D #DPA52-V06 OR APPROVED EQUIVALENT, NEMA I ENCLOSURE.

11 2" CONDUIT WITH 3 #2/0, AND 1 #6 GROUND.

12 $\frac{3}{4}$" CONDUIT WITH 3 #6 AND 1 #10 GROUND FOR 35 kW GENERATOR

13 2" CONDUIT WITH 3 #2/0, AND 1 #6 GROUND.

14 $\frac{3}{4}$" CONDUIT WITH #12 FOR MOTOR AND 2 #14 FOR S/L AND 2 #14 FOR LEVEL CONTROL AND 1 #12 GROUND.

15 $\frac{3}{4}$" CONDUIT WITH 3 #12 AND 2 #14 FOR S/L AND 1 #12 GROUND.

16 60 AMP MOLDED CASE CIRCUIT BREAKER WITH NEMA I ENCLOSURE. 480 VOLT, 2-POLE CUTLER-HAMMER #EHD2060, ENCLOSER #SFDN100 OR APPROVED EQUIVALENTS.

17 $\frac{3}{4}$" CONDUIT WITH 2 #6 AND 1 #10 GROUND.

18 1-1/4" CONDUIT WITH 3 #1 AND 1 #8 GROUND.

19 $\frac{3}{4}$" CONDUIT WITH 3 #12 AND 1 #12 GROUND.

20 $\frac{3}{4}$" CONDUIT WITH 2 #6 AND 1 #10 GROUND.

21 $\frac{3}{4}$" CONDUIT WITH 2 #12 AND 1 #12 GROUND.

MAIN LIFT STATION/LAB

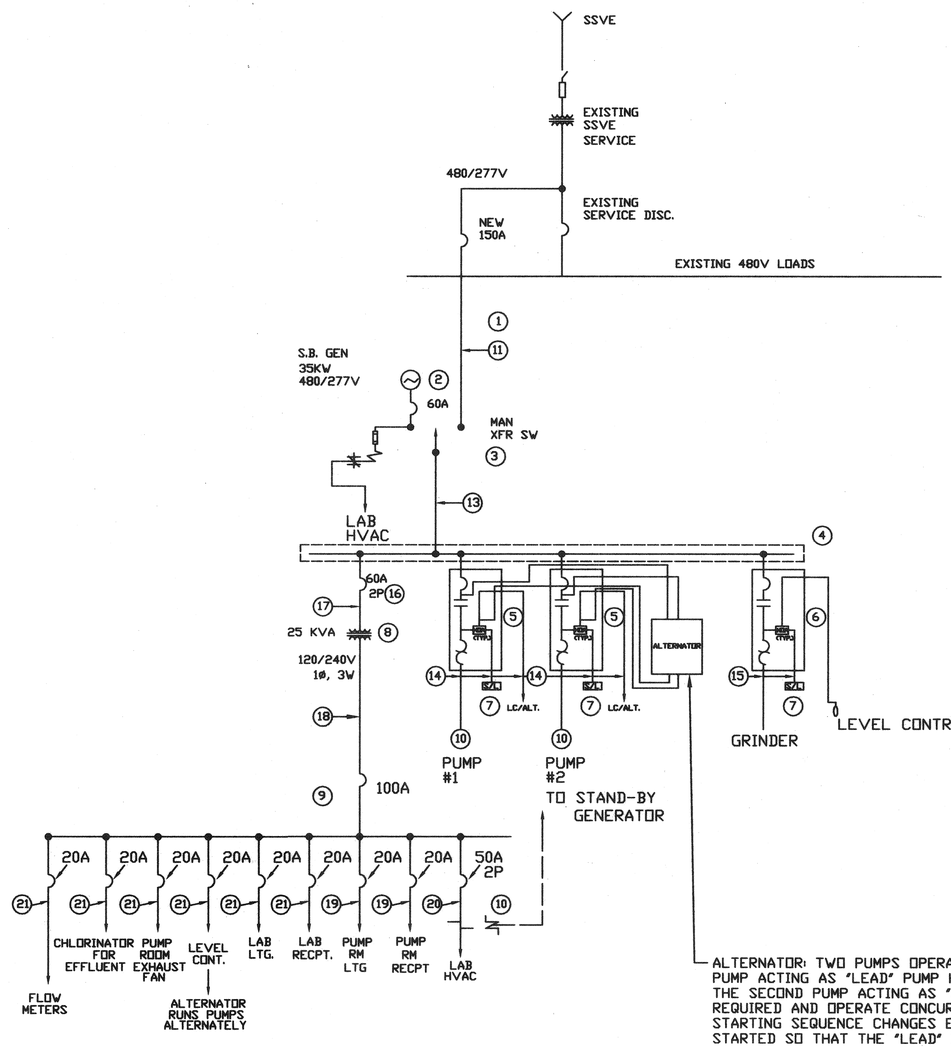

ALTERNATOR: TWO PUMPS OPERATING IN SEQUENCE WITH ONE PUMP ACTING AS 'LEAD' PUMP HANDLING NORMAL LOADS AND THE SECOND PUMP ACTING AS 'STANDBY' TO COME ON WHEN REQUIRED AND OPERATE CONCURRENTLY WITH 'LEAD' PUMP. STARTING SEQUENCE CHANGES EACH TIME THE PUMPS ARE STARTED SO THAT THE 'LEAD' DUTIES ALTERNATE.

GOLF COURSE PUMP STATION

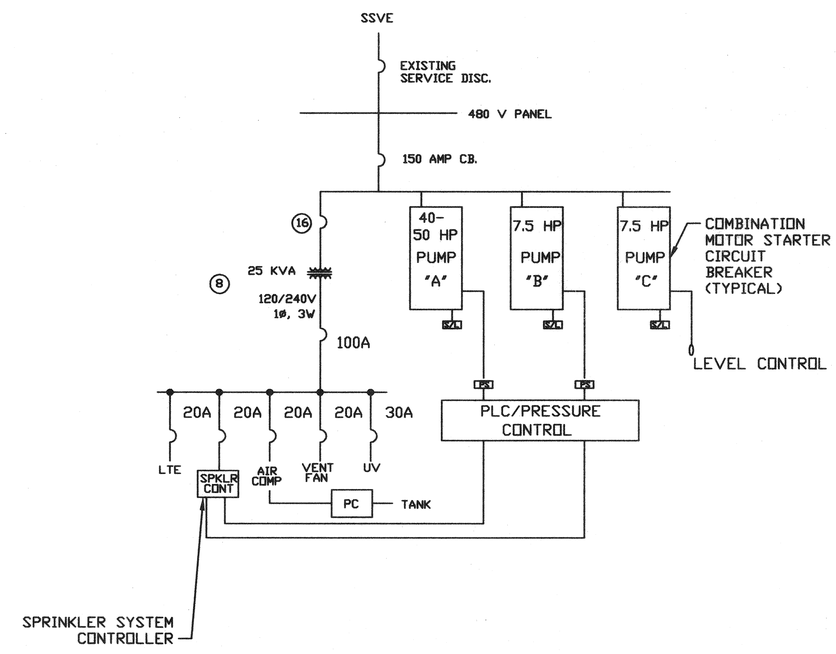

NOTES:

1. PUMP START DELAY TO ALLOW MOTOR OPERATED SLIDE GATE OPENING.
2. PUMP 'B' TO PROVIDE 100 psig 80 gpm INDEPENDENT AND/OR IN CONJUNCTION WITH OTHER PUMPS AS REQUIRED FOR IRRIGATION SYSTEM OPERATION.
3. LEVEL CONTROL TO START PUMP 'C' TO TRANSFER WATER TO LAKE COCHISE AND/OR CIRCULATE TO BIO-REACTOR PONDS.
4. U.V. SYSTEM TO OPERATE WITH ANY PUMP.

REVISIONS

CITY OF WILLCOX WASTEWATER TREATMENT PLANT

TRUELINE ENGINEERING
CIVIL ENGINEERING
609 SOUTH FIFTH AVENUE
SAFFORD, ARIZONA 85546
(520) 428-1504 FAX 428-1878
LAND SURVEYING

MAIN LIFT STATION/LAB AND GOLF COURSE PUMP STATION ELECTRICAL SCHEMATICS

11/21/00

DATE: NOV., 2000
JOB No.: 97020
DRAWN BY: C.D.C.

SHEET
14 OF 33

T:\Act_proj\97020\WWTP\plans\ELECSCHEM.dwg, 11/21/00 02:43:40 PM, HP1650C-MYLAR-J.pc3

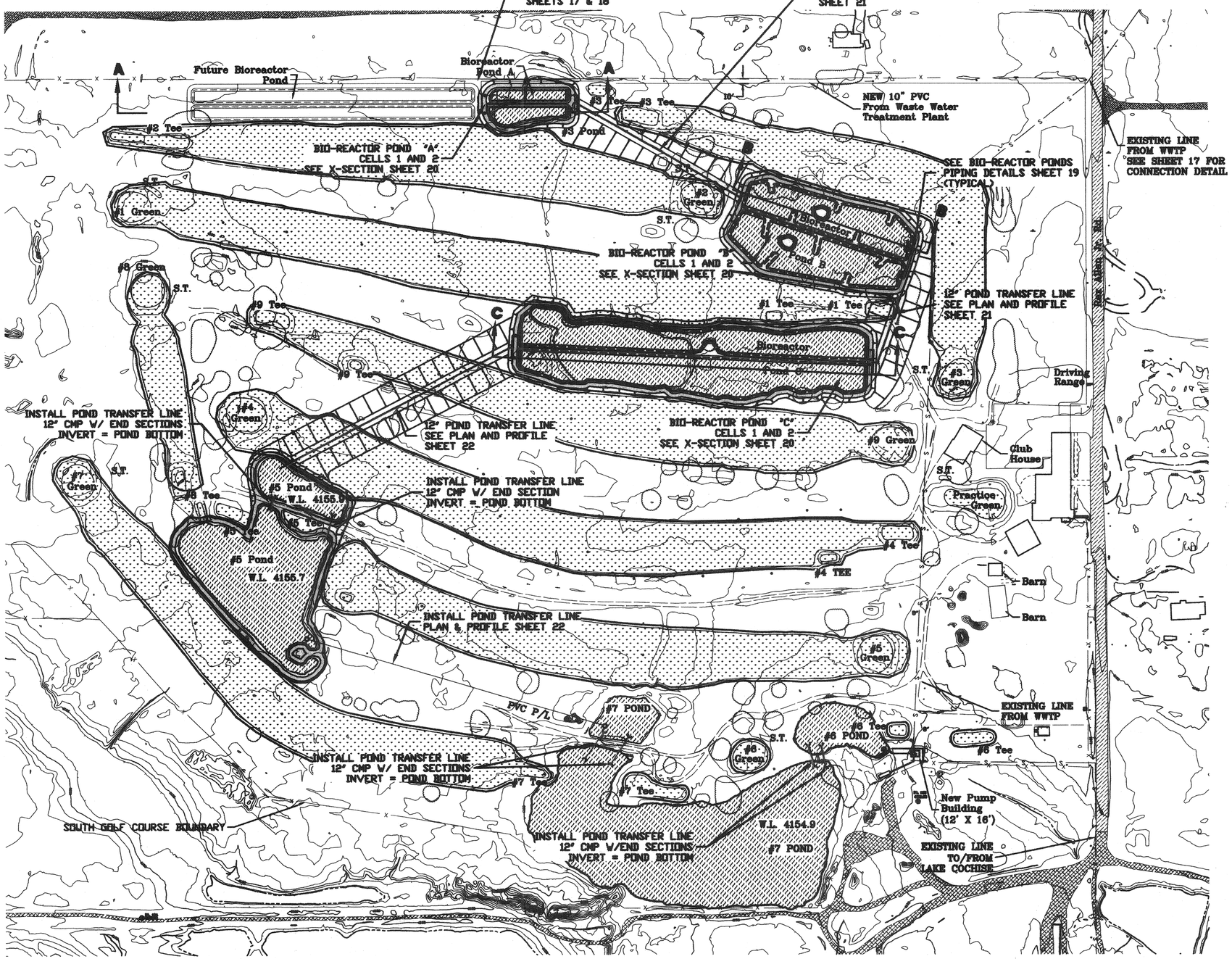

SCALE: 1"=100'

TWIN LAKES GOLF COURSE

REVISIONS

CITY OF WILLCOX
WASTEWATER
TREATMENT PLANT

TRUELINE ENGINEERING
CIVIL ENGINEERING
649 SOUTH FIFTH AVENUE
SAFFORD, ARIZONA 85546
LAND SURVEYING
(928) 428-1304 FAX 428-1878

GOLF COURSE
BIO-REACTOR PONDS
& PIPING LAYOUT

8/11/00

DATE: AUGUST, 2000
JOB No.: 97020
DRAWN BY: C.D.C.

SHEET
15 OF 33

T:\Act_proj\97020\WWTPplans\GC_PONDS.dwg, 08/30/2000 02:47:09 PM, HP1050C-MYLAR-L.pc3

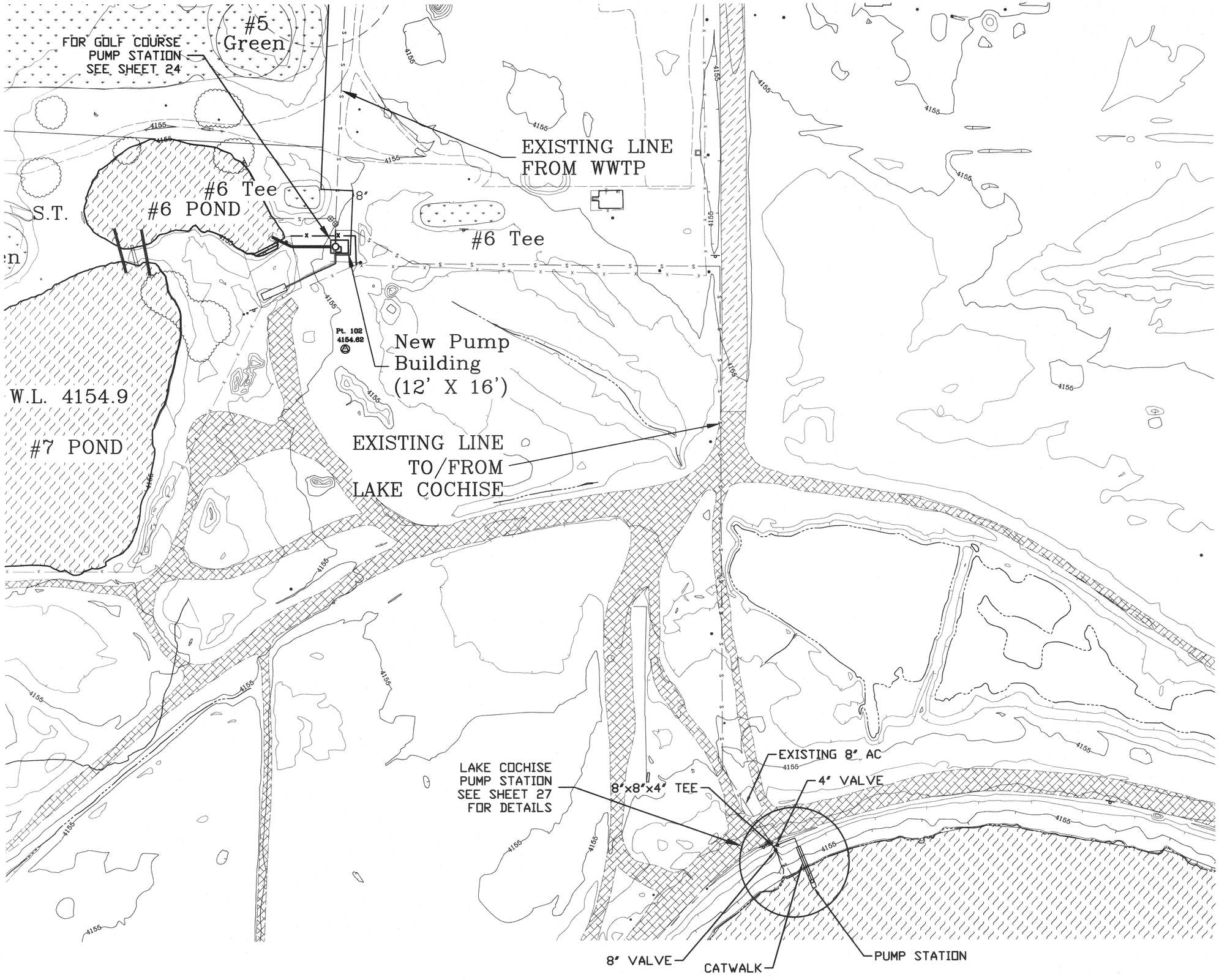

SCALE: 1"=40'

REVISIONS

CITY OF WILLCOX
WASTEWATER
TREATMENT PLANT

TRUELINE ENGINEERING
CIVIL ENGINEERING
609 SOUTH FIFTH AVENUE
SAFFORD, ARIZONA 85546
LAND SURVEYING
(520) 428-1504 FAX 428-1878

LAKE COCHISE
LAYOUT

11/21/00

DATE: NOV., 2000
JOB No.: 97020
DRAWN BY: L.K.P.

SHEET
16 OF 33

T:\Act_proj\97020\WWTP\plans\COCHISESTA .dwg, 11/21/00 02:57:01 PM, HP1050C-SHEET-MYLAR.pc3

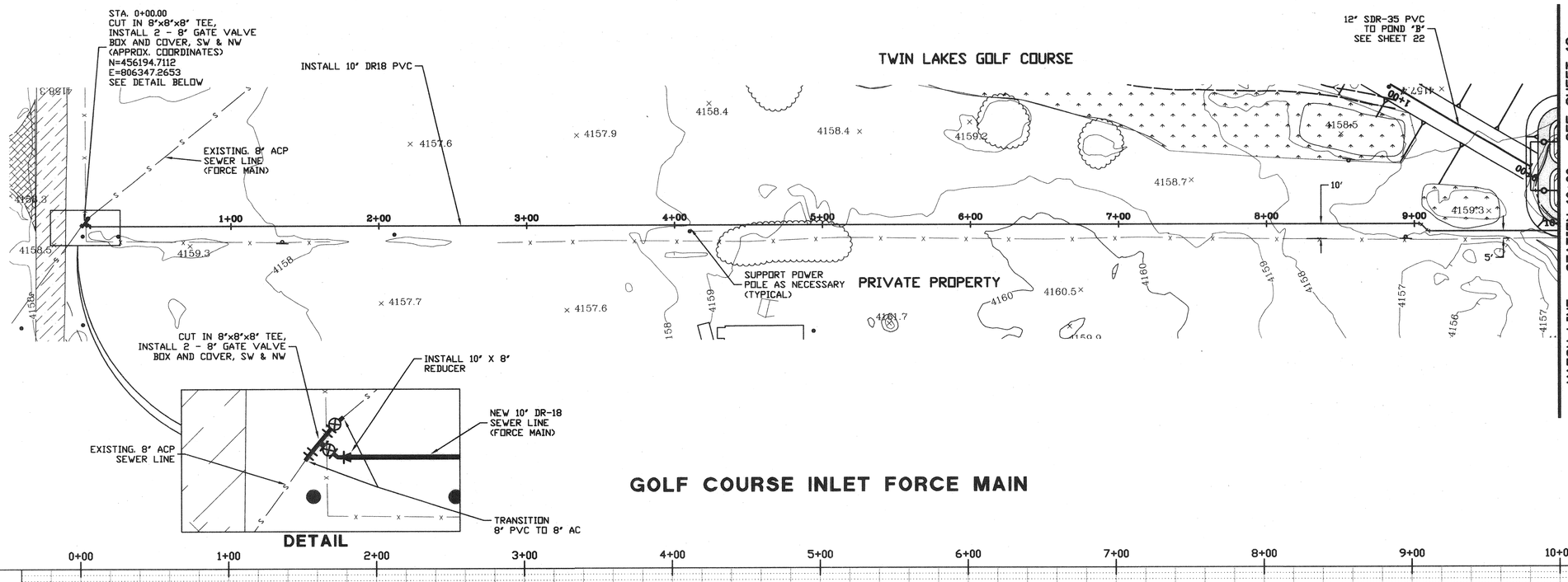

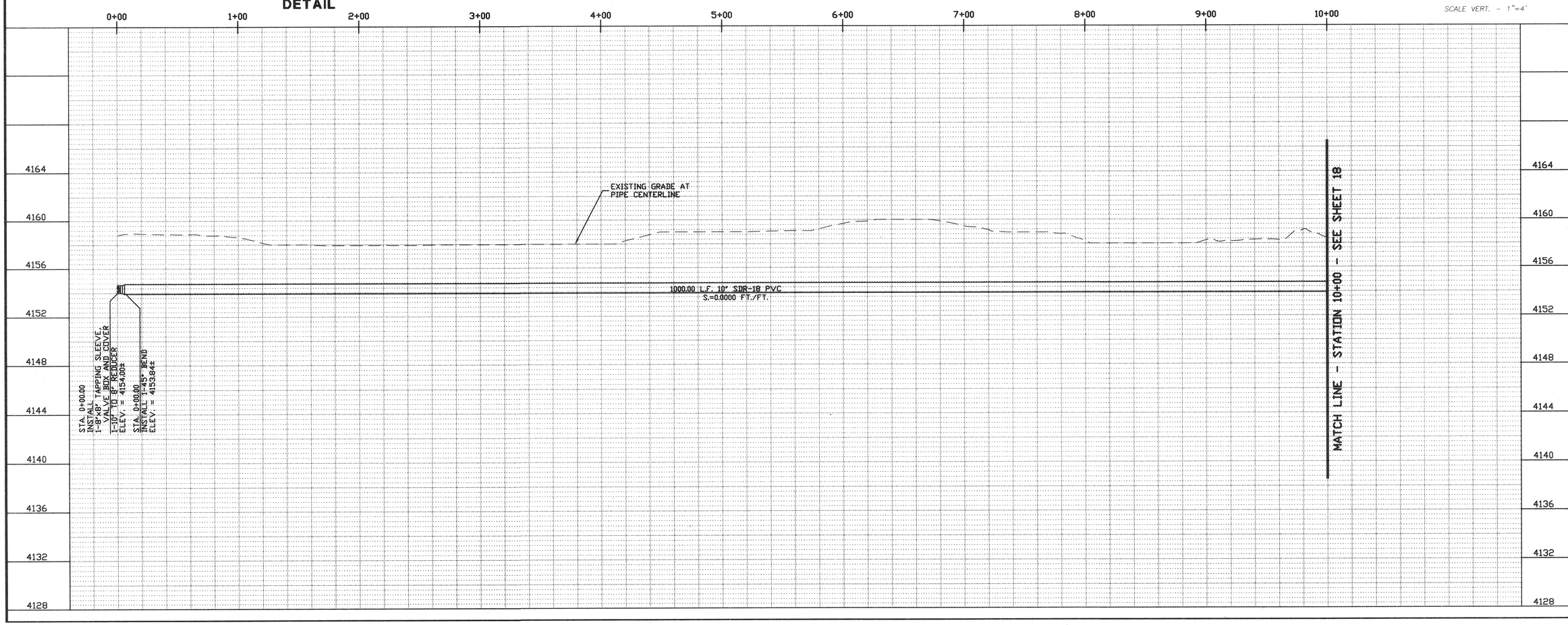

REVISIONS

CITY OF WILLCOX WASTEWATER TREATMENT PLANT

TRUELINE ENGINEERING
CIVIL ENGINEERING
609 SOUTH FIFTH AVENUE
SAFFORD, ARIZONA 85546
LAND SURVEYING
(520) 428-1504 FAX 428-1878

GOLF COURSE INLET PLAN & PROFILE

11/21/00

DATE: NOV., 2000
JOB No.: 97020
DRAWN BY: L.K.P.

SHEET
17 OF 33

T:\Act. proj\97020\WWTP\plans\GC-INLET.dwg, 11/22/00 03:11:33 PM, HP1050C-SHEET-MPLAR.pc3

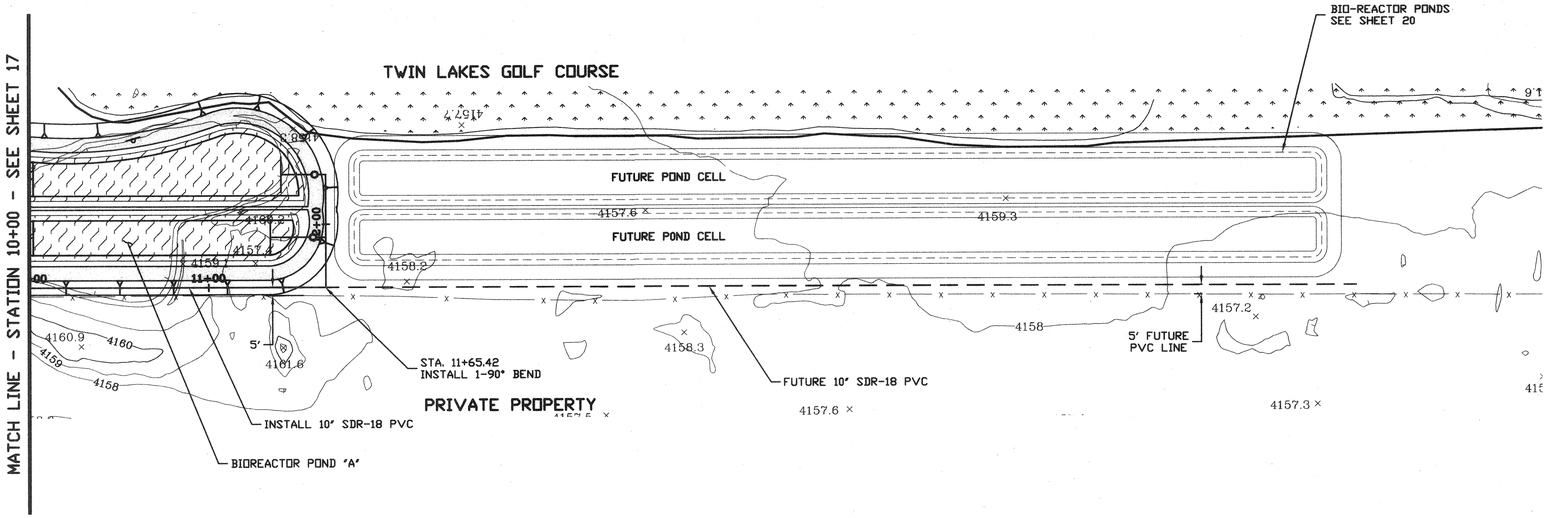

GOLF COURSE INLET FORCE MAIN

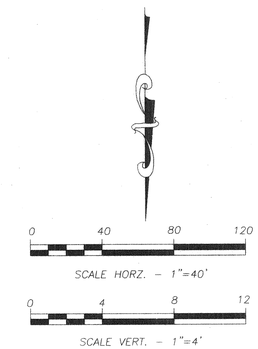

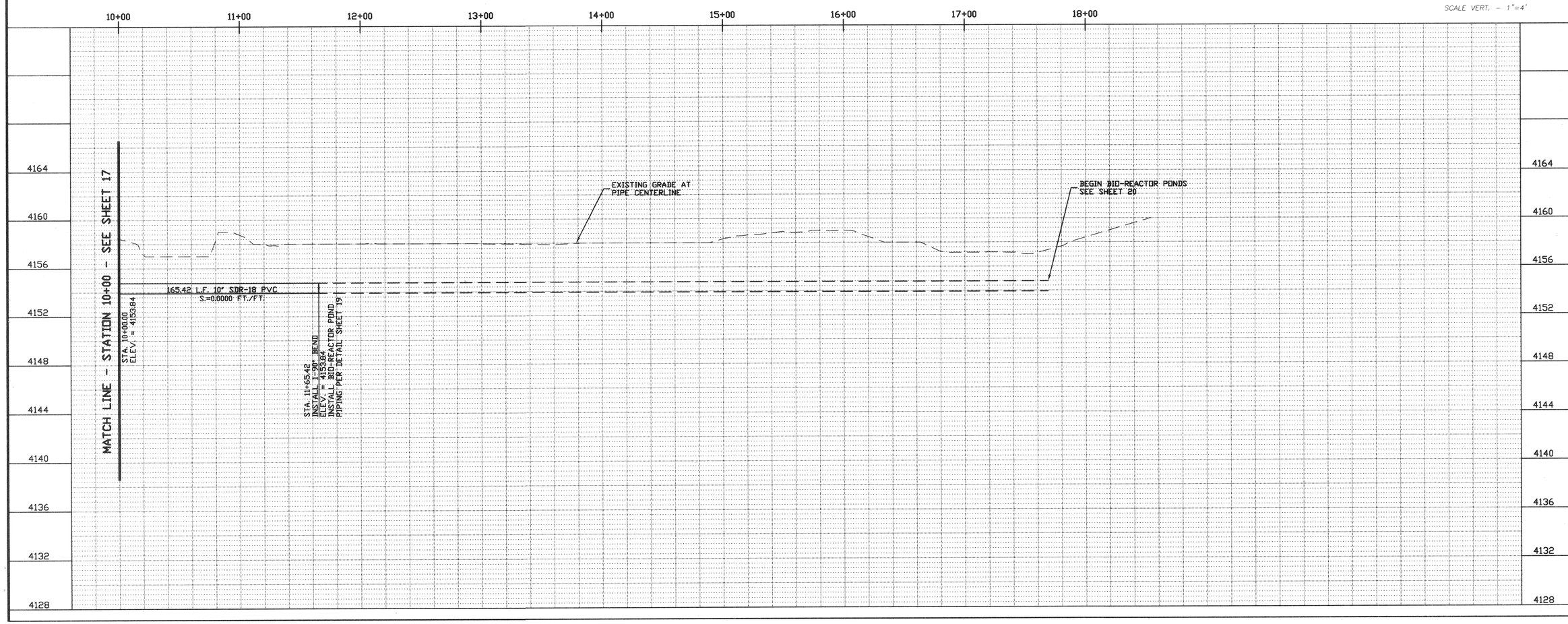

REVISIONS

CITY OF WILLCOX
WASTEWATER
TREATMENT PLANT

TRUELINE ENGINEERING
CIVIL ENGINEERING
609 SOUTH FIFTH AVENUE
SAFFORD, ARIZONA 85546
LAND SURVEYING
(520) 428-1304 FAX 428-1878

GOLF COURSE INLET
PLAN & PROFILE

11/21/00

DATE: NOV., 2000
JOB No.: 97020
DRAWN BY: L.K.P.

SHEET
18 OF 33

T:\Act_proj\97020\WWTP\plans\GC-INLET2.dwg, 11/21/00 04:28:42 PM, HP1050C-MYLAR-L.pc3

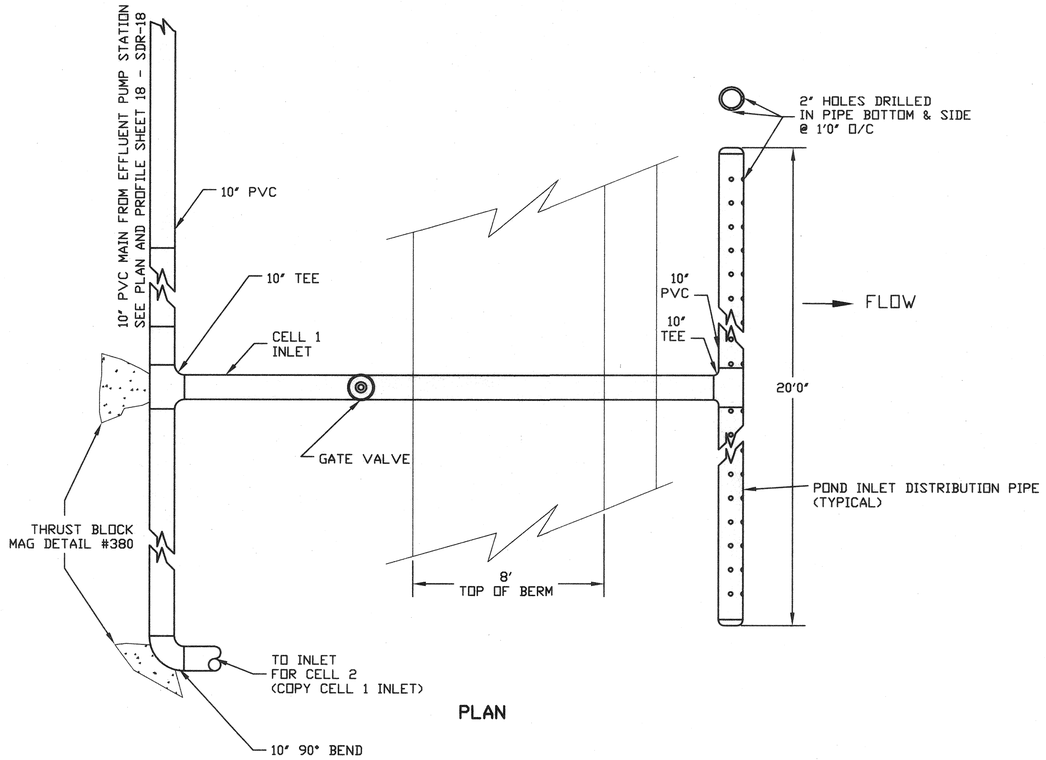

PLAN

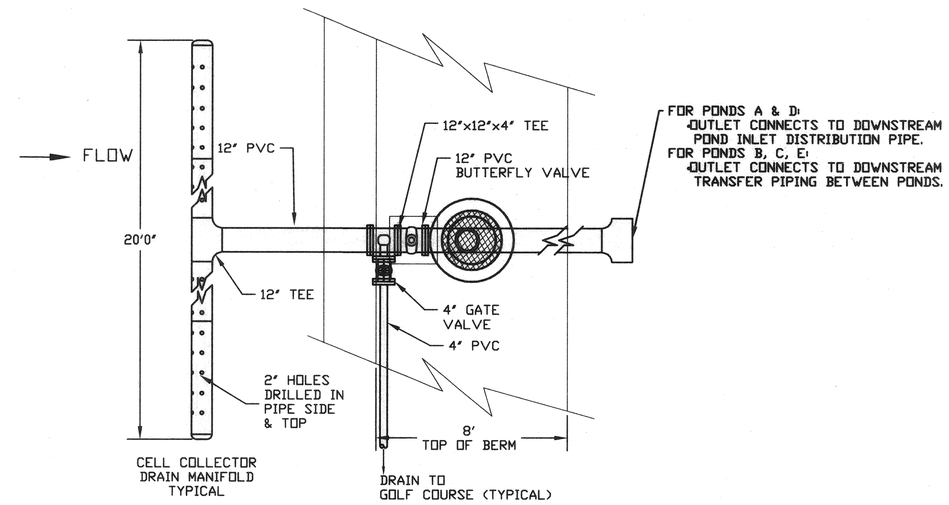

PLAN

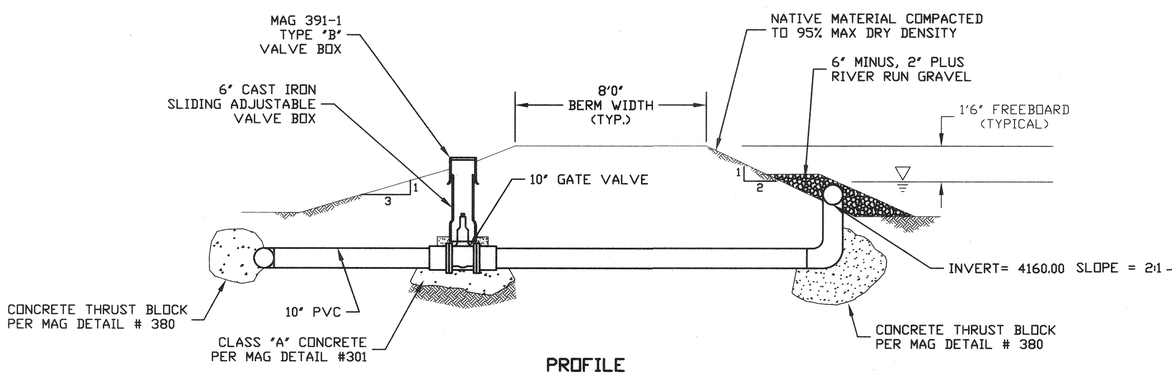

PROFILE

POND A INLET WORKS ELEVATION CELL 1 & 2 AND POND BERM DETAIL

N.T.S.

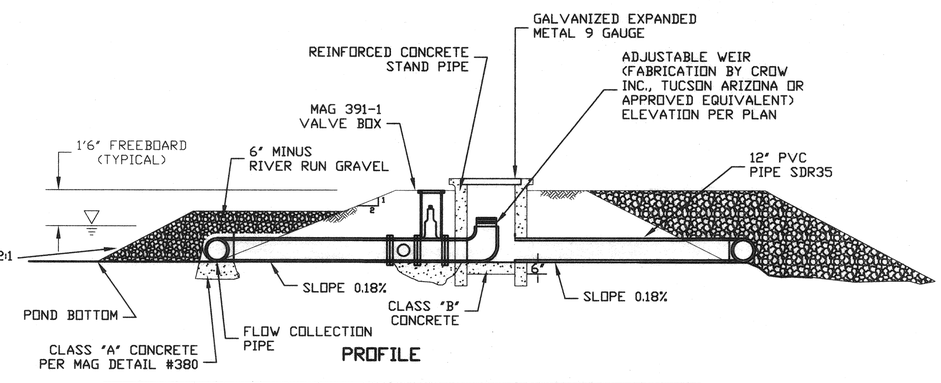

PROFILE

OUTLET PIPING AND TRANSFER WORKS (TYPICAL FOR ALL BIOREACTOR POND OUTLETS)

N.T.S.

REVISIONS

CITY OF WILLCOX
WASTEWATER
TREATMENT PLANT

TRUELINE ENGINEERING
CIVIL ENGINEERING
609 SOUTH FIFTH AVENUE
SAFFORD, ARIZONA 85546
(520) 428-1304 FAX 428-1878
LAND SURVEYING

BIO-REACTOR
PONDS PIPING

DATE: NOV., 2000
JOB No.: 97020
DRAWN BY: L.K.P.

T:\Act_proj\97020\WWTP\plans\BIOREA.dwg, 11/21/00 03:20:02 PM, HP1050C-MYLAR-L.pc3

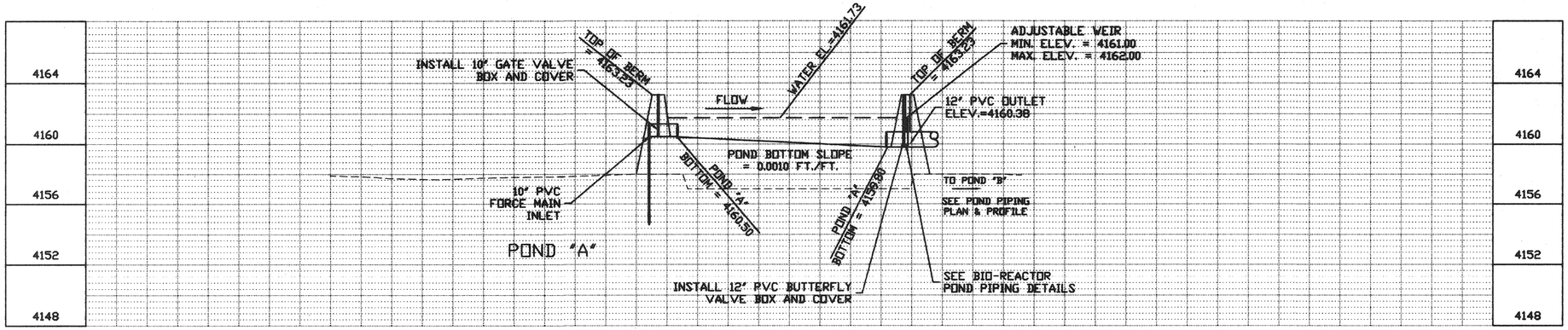

CROSS-SECTION "A-A"
POND "A"

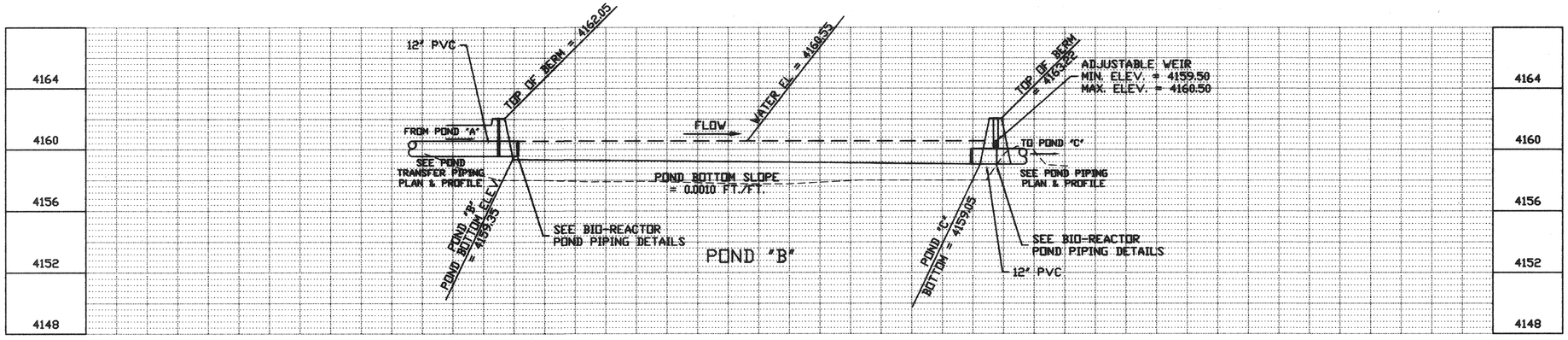

CROSS-SECTION "B-B"
POND "B"

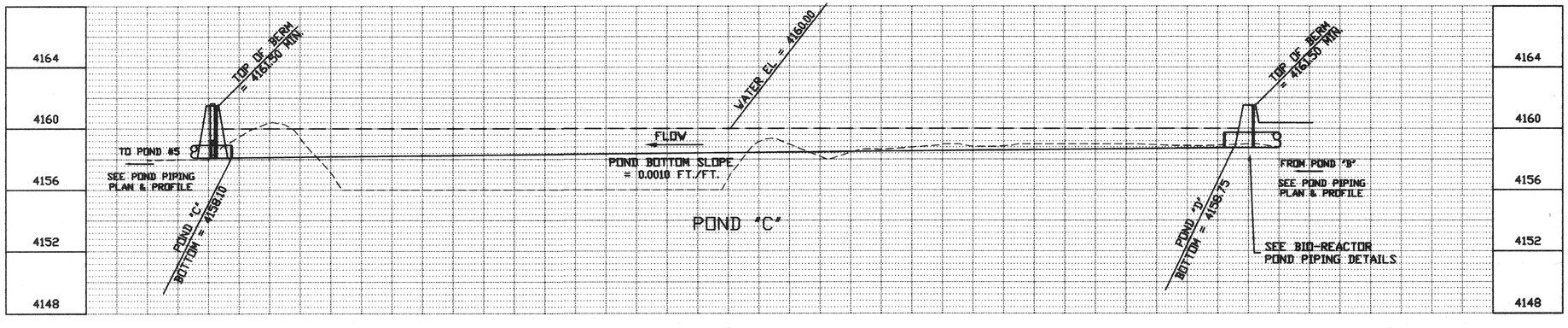

CROSS-SECTION "C-C"
POND C

NOTE:

SEE SHEET 15 FOR
CROSS-SECTION LOCATIONS

SCALE: HORZ. - 1"=40'
VERT. - 1"=4'

REVISIONS

CITY OF WILLCOX
WASTEWATER
TREATMENT PLANT

TRUELINE ENGINEERING
CIVIL ENGINEERING
609 SOUTH FIFTH AVENUE
SAFFORD, ARIZONA 85546
LAND SURVEYING
(520) 428-1504 FAX 428-1878

GOLF COURSE POND
CROSS-SECTIONS

22002
W. CHRIS LOFTANS
3/31/00
REGISTERED PROFESSIONAL ENGINEER
ARIZONA, U.S.A.

DATE: AUGUST, 2000
JOB No.: 97020
DRAWN BY: L.K.P.

SHEET
20 OF 33

T:\Act_proj\97020\WWTP\plans\GC_PONDS-XSEC.dwg, 08/30/2000 03:21:46 PM, HP1050C-MYLAR-L.pc3

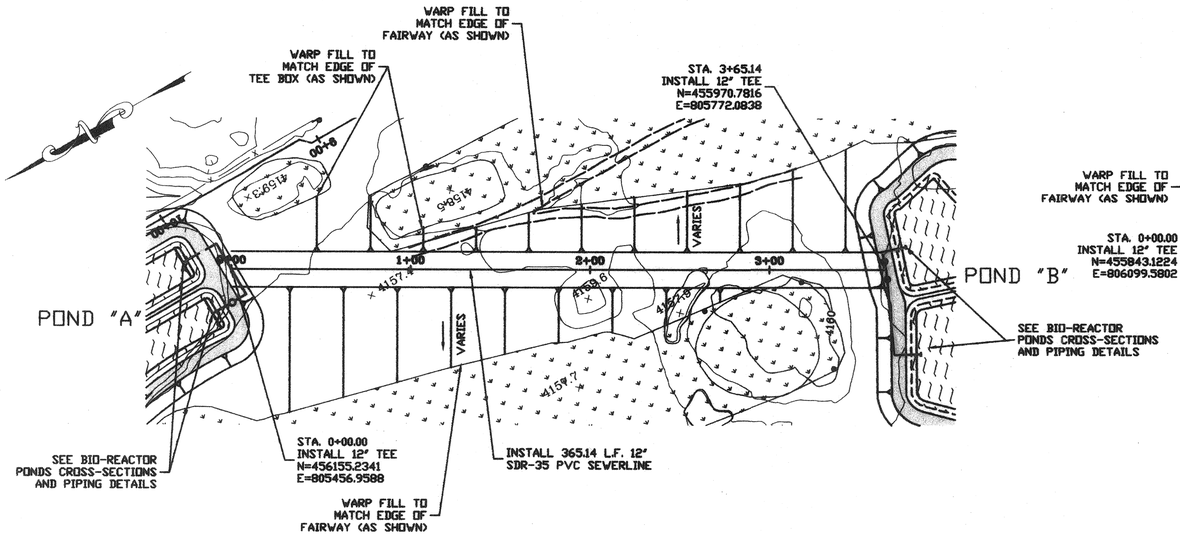

BIO-REACTOR PONDS "A" TO "B" TRANSFER PIPING

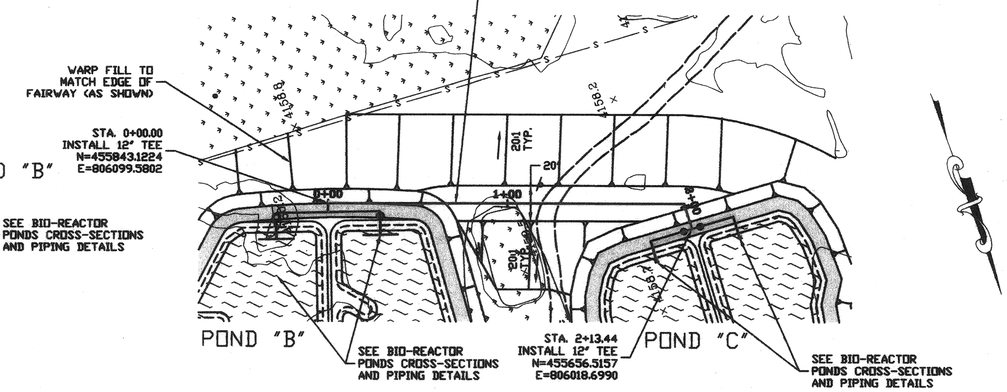

BIO-REACTOR PONDS "B" TO "C" TRANSFER PIPING

NOTE FOR COVER

CONTRACTOR TO FILL AND SHAPE TEE BOXES & GREENS WHICH ARE DISTURBED OR AFFECTED BY CONSTRUCTION TO THE GOLF COURSE GREENSKEEPER'S SPECIFICATIONS.

0 40 80 120
SCALE HORZ. – 1"=40'

0 4 8 12
SCALE VERT. – 1"=4'

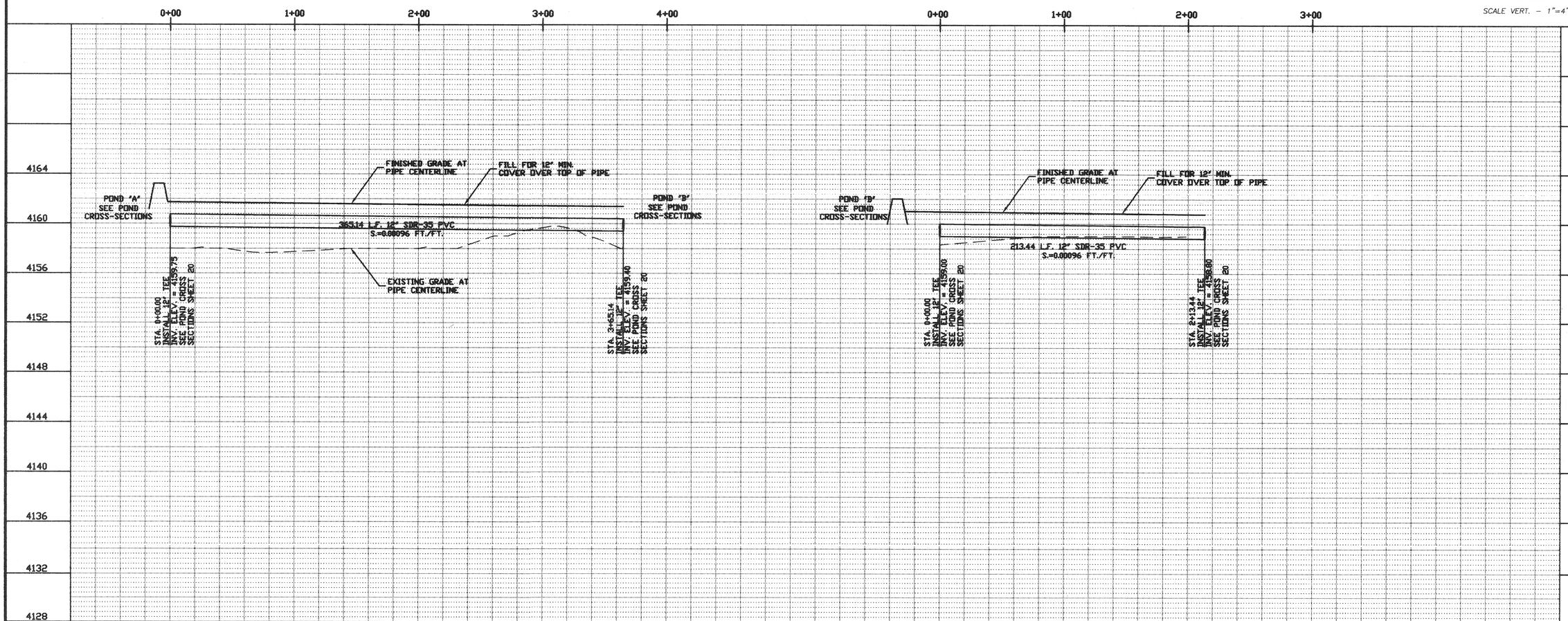

REVISIONS

CITY OF WILLCOX WASTEWATER TREATMENT PLANT

TRUELINE ENGINEERING
CIVIL ENGINEERING
609 SOUTH FIFTH AVENUE
SAFFORD, ARIZONA 85546
LAND SURVEYING
(928) 428-1504 FAX 428-1879

BIO-REACTOR PONDS TRANSFER PIPING

REGISTERED PROFESSIONAL ENGINEER (CIVIL) 22202 WM. GREG LORING 9/11/00 ARIZONA U.S.A.

DATE: AUGUST, 2000
JOB No.: 97020
DRAWN BY: L.K.P.

SHEET
21 OF 33

T:\Act_proj\97020\WTP\plans\GC-PP1.dwg, 08/30/2000 03:28:59 PM, HP1050C-MYLAR-L.pc3

BERM SLOPE OUTSIDE = 3:1
BERM SLOPE INSIDE = 2:1

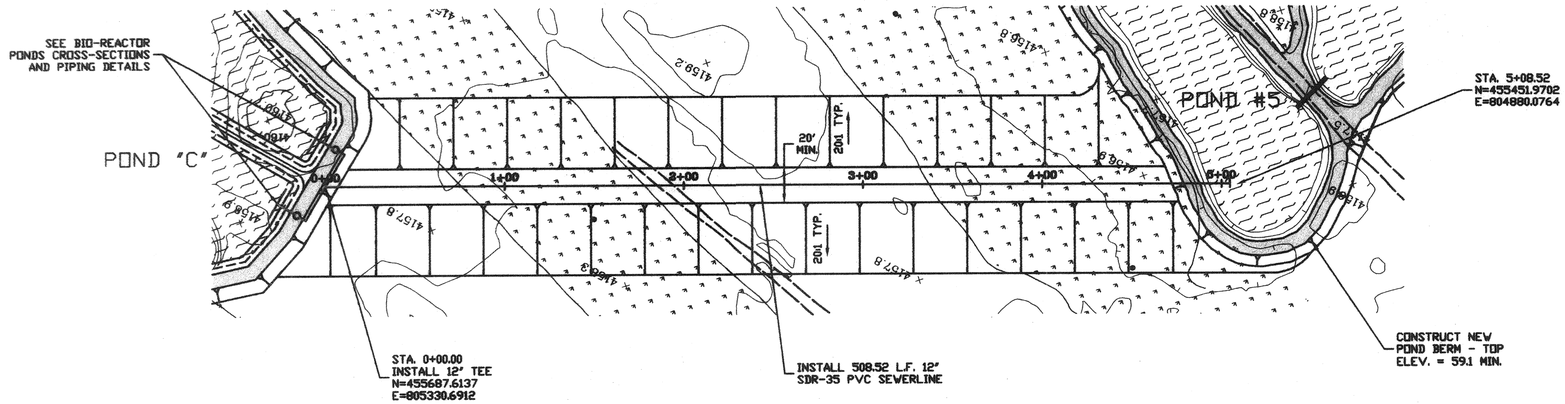

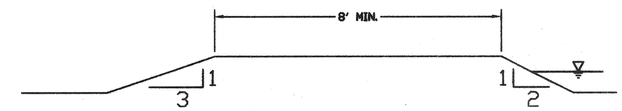

POND #5 BERM CROSS SECTION
N.T.S.

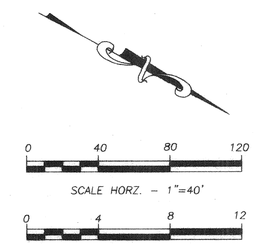

BIO-REACTOR POND "C" TO POND #5 TRANSFER PIPING

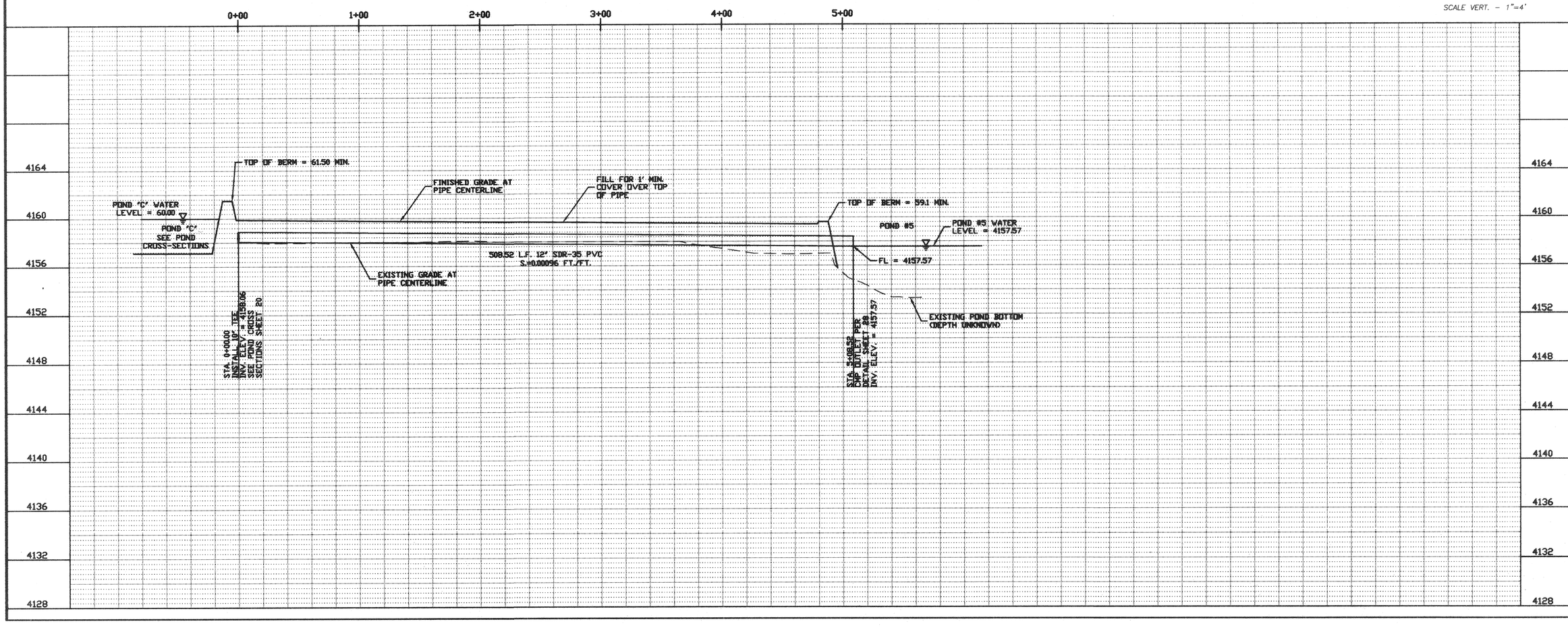

REVISIONS

CITY OF WILLCOX
WASTEWATER
TREATMENT PLANT

TRUELINE ENGINEERING
CIVIL ENGINEERING
699 SOUTH FIFTH AVENUE
SAFFORD, ARIZONA 85546
LAND SURVEYING
(520) 428-1504 FAX 428-1978

BIO-REACTOR PONDS
TRANSFER PIPING

REGISTERED PROFESSIONAL ENGINEER
97020
W. GREG LANGE
9/11/00
ARIZONA U.S.A.

DATE: AUGUST, 2000
JOB No.: 97020
DRAWN BY: L.K.P.

SHEET
22 OF 33

T:\Act_proj\97020\WWTP\plans\GC-PP2.dwg, 08/30/2000 03:54:39 PM, HP1050C-MY\LAR-L.pc3

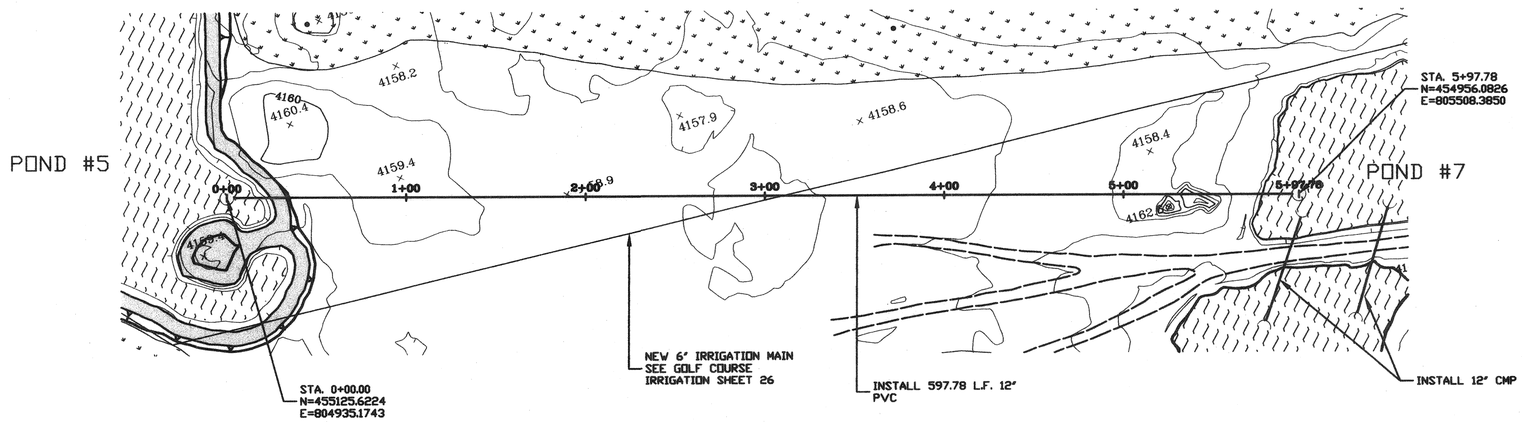

POND #5 TO #7
TRANSFER PIPING

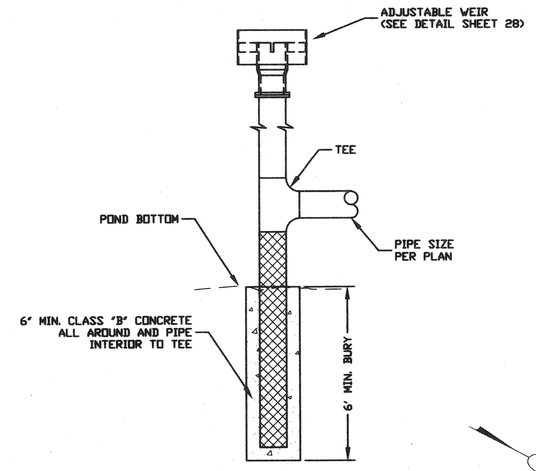

PIPE SUPPORT DETAIL AND ADJUSTABLE WEIR FOR PIPE INLET

N.T.S.

0 40 80 120
SCALE HORZ. - 1"=40'

0 4 8 12
SCALE VERT. - 1"=4'

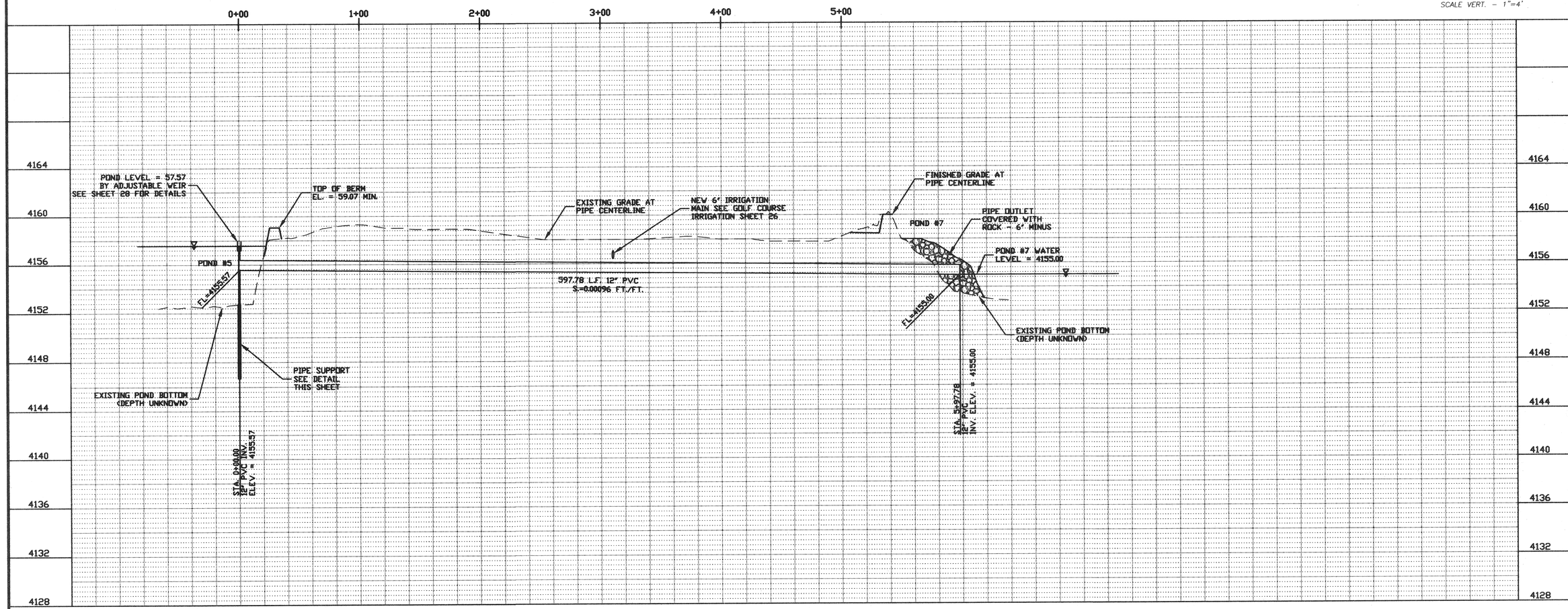

REVISIONS

CITY OF WILLCOX WASTEWATER TREATMENT PLANT

TRUELINE ENGINEERING
CIVIL ENGINEERING
609 SOUTH FIFTH AVENUE
SAFFORD, ARIZONA 85546
LAND SURVEYING
(520) 428-1504 FAX 428-1878

EXISTING PONDS TRANSFER PIPING

REGISTERED PROFESSIONAL ENGINEER
25602
W. GREG LOFLAND
3/21/00
ARIZONA, U.S.A.

DATE: JULY, 2000
JOB No.: 97020
DRAWN BY: L.K.P.

SHEET
23 OF 33

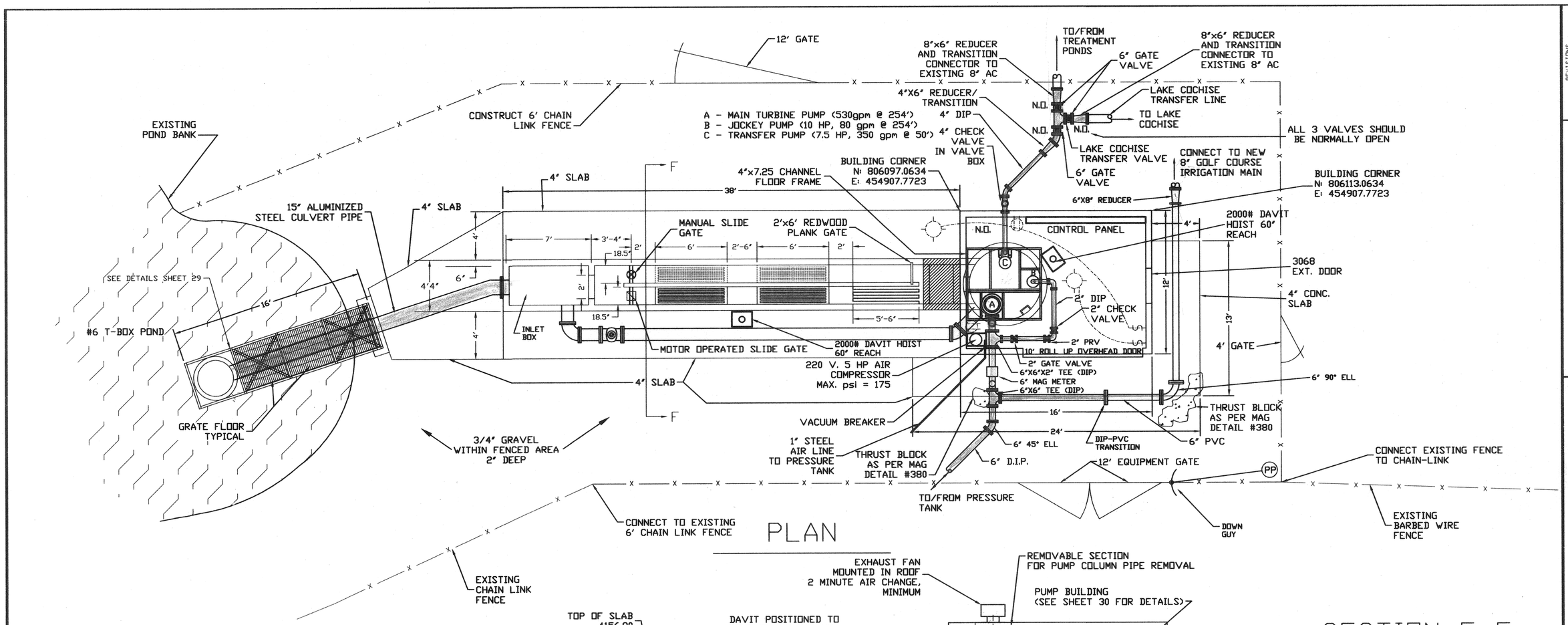

PLAN

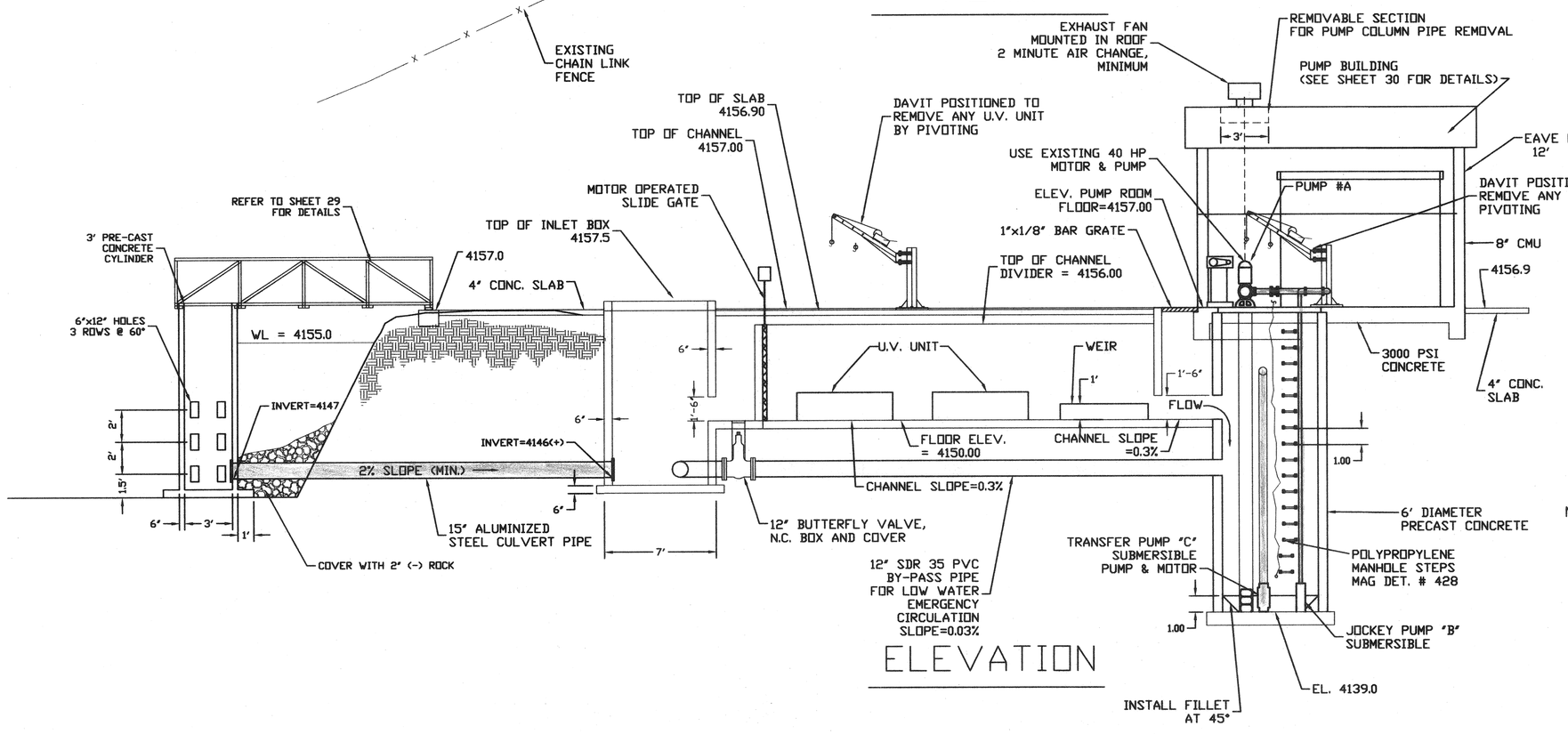

ELEVATION

SECTION F-F

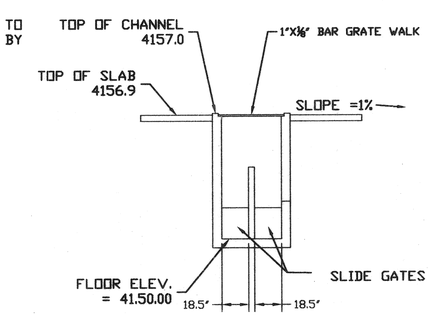

NOTE: ALL SIDEWALK SLABS & FLOOR SLABS PLACED ON 6" COMPACTED AB

ALL CORNERS CHAMFERED

SCALE 1"=4'

REVISIONS

CITY OF WILLCOX
WASTE WATER
TREATMENT PLANT

TRUELINE ENGINEERING
CIVIL ENGINEERING
609 SOUTH FIFTH AVENUE
SAFFORD, ARIZONA 85546
LAND SURVEYING
(928) 428-1504 FAX 428-1978

GOLF COURSE
PUMP STATION

DATE: NOV., 2000
JOB No.: 97020
DRAWN BY: T.L.L.

SHEET
24 OF 33

T:\Acd_proj\97020\W\WTP\plans\pmpsl.dwg, 11/2/100 03:34:46 PM, HP1050C-MYLAR-L.pc3

PUMP 'A'-TURBINE MOUNTED ON 'DECK' OF WET WELL
PUMP 'B'-SUBMERSIBLE W/ DROP PIPE
PUMP 'C'-SUBMERSIBLE MOUNTED ON BRACKETS & RAILS

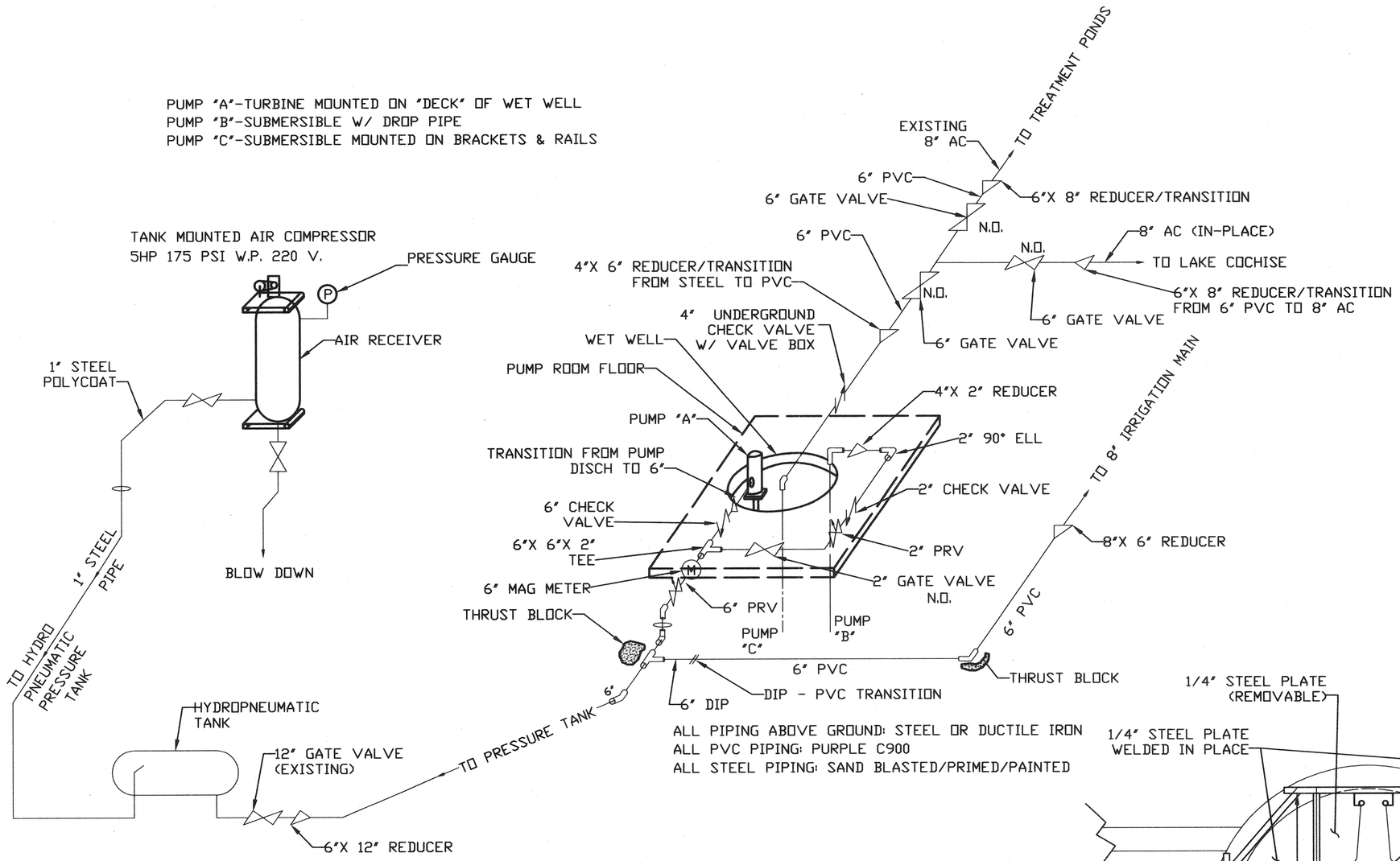

ALL PIPING ABOVE GROUND: STEEL OR DUCTILE IRON
ALL PVC PIPING: PURPLE C900
ALL STEEL PIPING: SAND BLASTED/PRIMED/PAINTED

PRESSURE REDUCING AND SURGE CONTROL VALVES
6" PRV - BERMAD 720-48 OR EQUAL
2" PRV - BERMAD 720-48 OR EQUAL

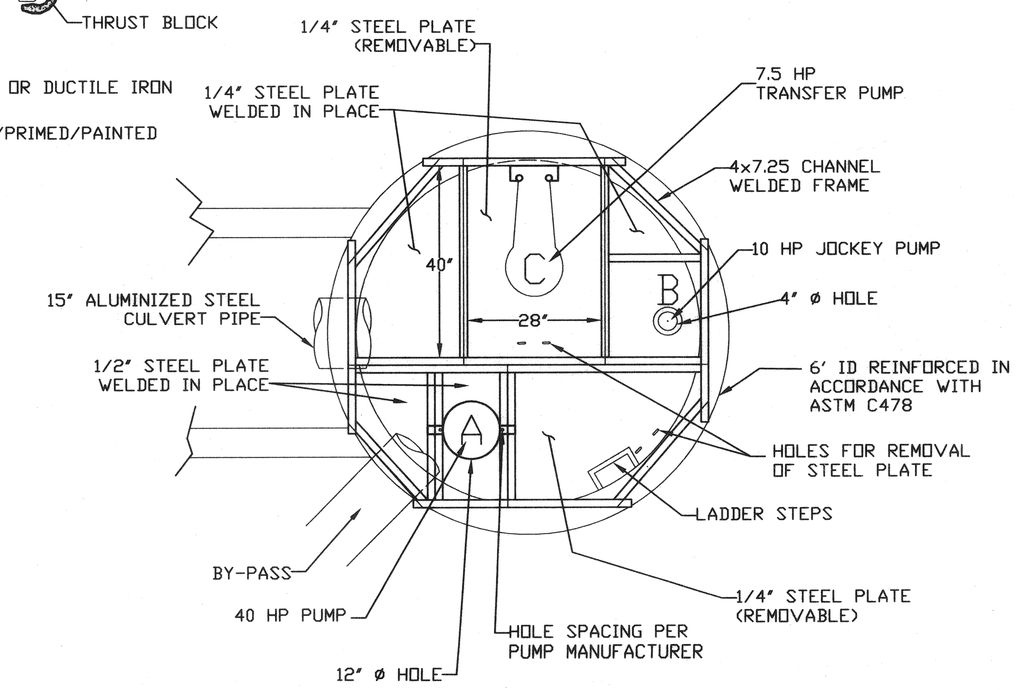

REVISIONS

CITY OF WILLCOX
WASTEWATER
TREATMENT PLANT

TRUELINE ENGINEERING
CIVIL ENGINEERING
609 SOUTH FIFTH AVENUE
SAFFORD, ARIZONA 85546
(520) 428-1304 FAX 428-1878
LAND SURVEYING

GOLF COURSE PUMP
STATION PIPING

DATE: NOV., 2000
JOB No.: 97020
DRAWN BY: T.L.L.

SHEET
25 OF 33

T:\Act_proj\97020\WWTP\plans\PMCR5SH.dwg, 11/21/00 03:38:57 PM, HP1050C-M\1ARL.pc3

Future Bioreactor Pond
Bioreactor Pond A
#3 Tee
#3 Tee
10'
NEW 10" PVC From Waste Water Treatment Plant
EXISTING LINE FROM WWTP
#2 Tee
#3 Pond
S.T.
#2 Green
S.T.
Bioreactor Pond B
S.T.
#1 Green
#8 Green
S.T.
#9 Tee
#1 Tee
#1 Tee
Bioreactor Pond C
#9 Tee
#4 Green
S.T.
#3 Green
Driving Range
Rex Allen Jr. Rd.
SCALE: 1"=80'
#9 Green
Club House
S.T.
#7 Green
S.T.
#8 Tee
#5 Pond W.L. 4155.9
#5 Tee
#5 Pond W.L. 4155.7
Practice Green
#4 Tee
#4 TEE
Barn
Barn
#5 Green
PVC P/L
#7 POND
EXISTING LINE FROM WWTP
#6 Tee
#6 POND
S.T.
#6 Green
#6 Tee
#7 Tee
#7 Tee
New Pump Building (12' X 16')
W.L. 4154.9
#7 POND
EXISTING LINE TO/FROM LAKE COCHISE
SOUTH GOLF COURSE BOUNDARY

LEGEND

○	SPRINKLER HEAD	———	LATERAL (2" - 4 HEADS, 1½" - 3 HEADS, 1¼" - 2 HEADS, 1" - 1 HEAD)
⬡	ELECTRIC VALVE	□	QUICK COUPLER
Ⓒ	CONTROLLER	———	MAIN LINE
⋈	GATE VALVE	◐	AIR RELEASE
		◯	TYPICAL SPRAY PATTERN

NOTE: ALL IRRIGATION PIPE SHALL BE COLOR CODED IN ACCORDANCE WITH ADEQ

TWIN LAKES GOLF COURSE

REVISIONS

CITY OF WILLCOX WASTEWATER TREATMENT PLANT

TRUELINE ENGINEERING
CIVIL ENGINEERING
609 SOUTH FIFTH AVENUE
SAFFORD, ARIZONA 85546
LAND SURVEYING
(928) 428-1504 FAX 428-1878

GOLF COURSE IRRIGATION SYSTEM

Registered Professional Engineer (Civil) CERTIFICATE NO. 22302 W. GREG LOZANO Date Signed 10/7/00 ARIZONA, U.S.A.

DATE: OCTOBER, 2000
JOB No.: 97020
DRAWN BY: T.L.L.

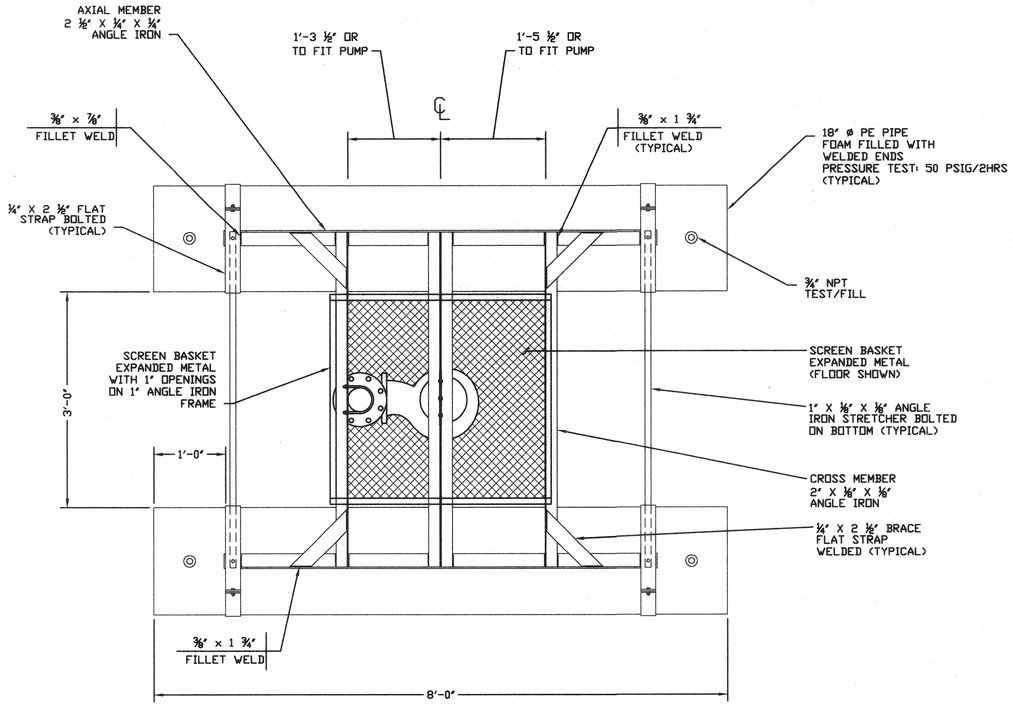

TOP

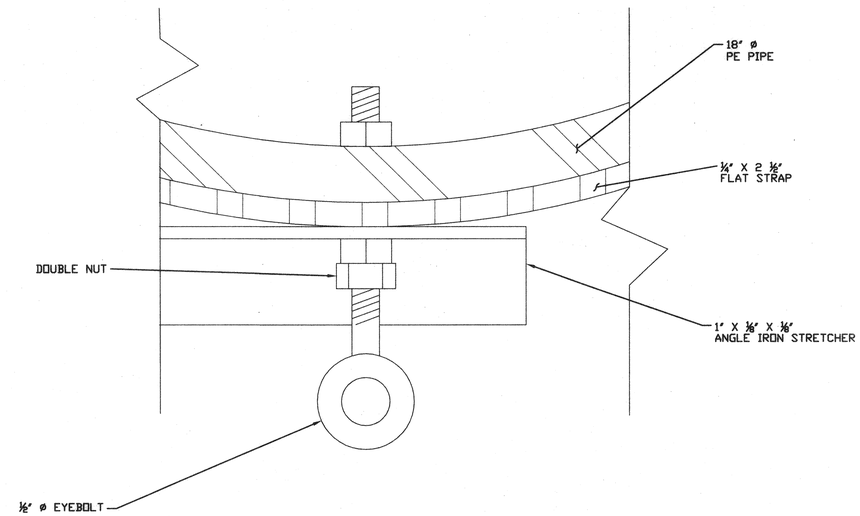

ANCHOR EYEBOLT DETAIL

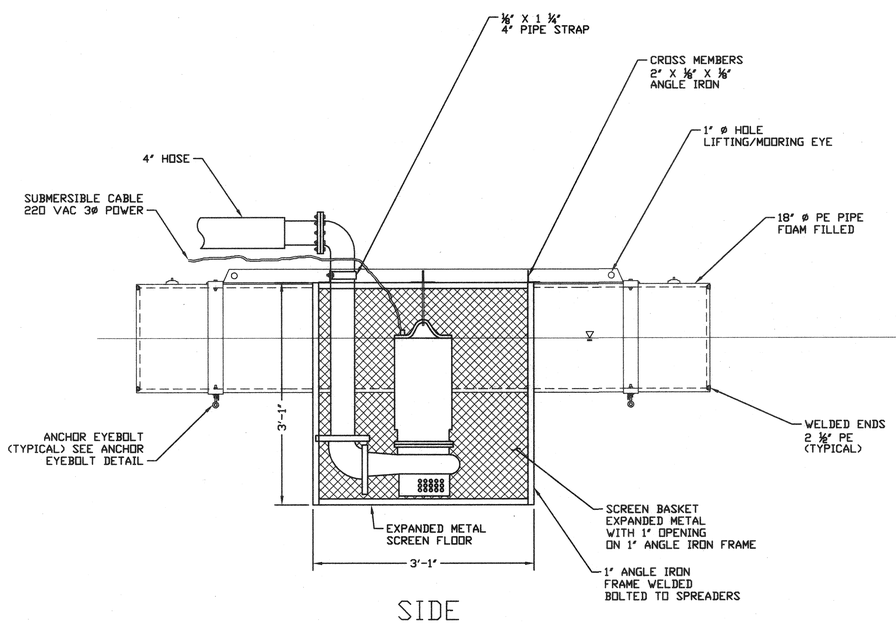

SIDE

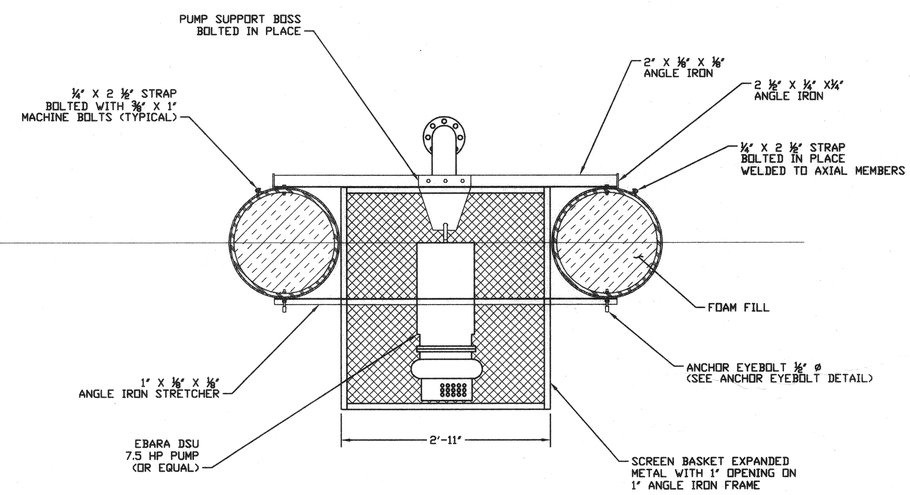

END

NOTE:
ALL METAL= STAINLESS STEEL

REVISIONS

CITY OF WILLCOX
WASTE WATER
TREATMENT PLANT

TRUELINE ENGINEERING
CIVIL ENGINEERING
609 SOUTH FIFTH AVENUE
SAFFORD, ARIZONA 85546
LAND SURVEYING
(520) 428-1594 FAX 428-1978

LAKE COCHISE
PUMP STATION

DATE: NOV., 2000
JOB No.: 97020
DRAWN BY: T.L.L.

SHEET
27 OF 33

T:\Act_proj\97020\WWTPplans.dwg, UMP2.dwg, 11/21/00 03:49:13 PM, HP1050C-MYLAR-L.pc3

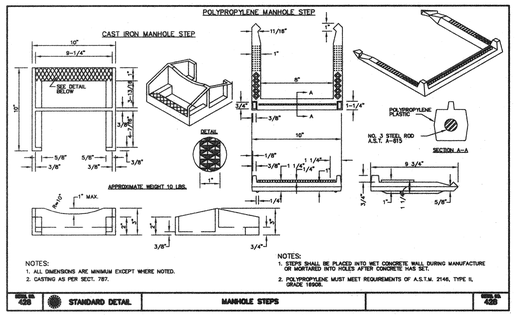

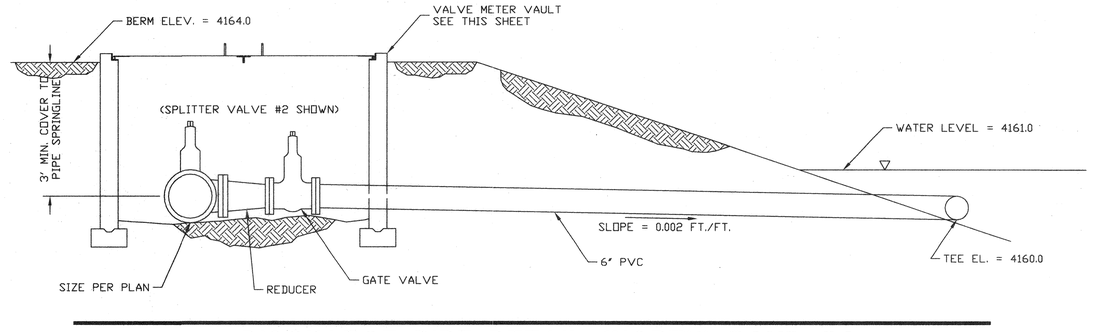

DISCHARGE PIPE DETAIL (NORTH) POND #2

N.T.S.

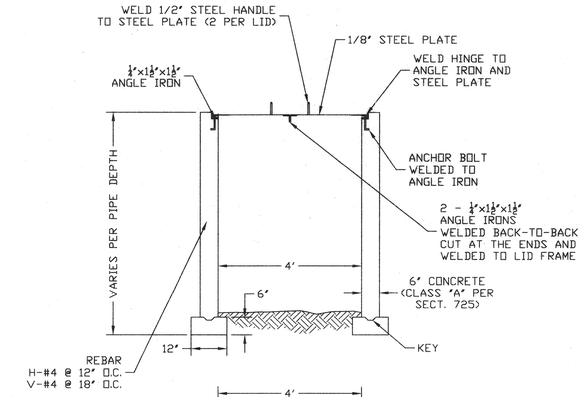

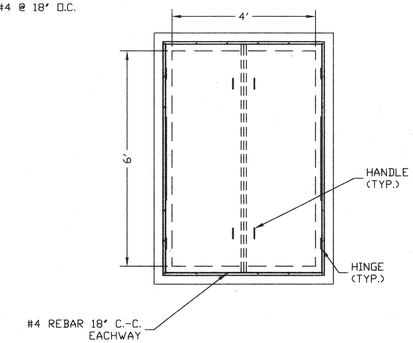

VALVE/METER VAULT

N.T.S.

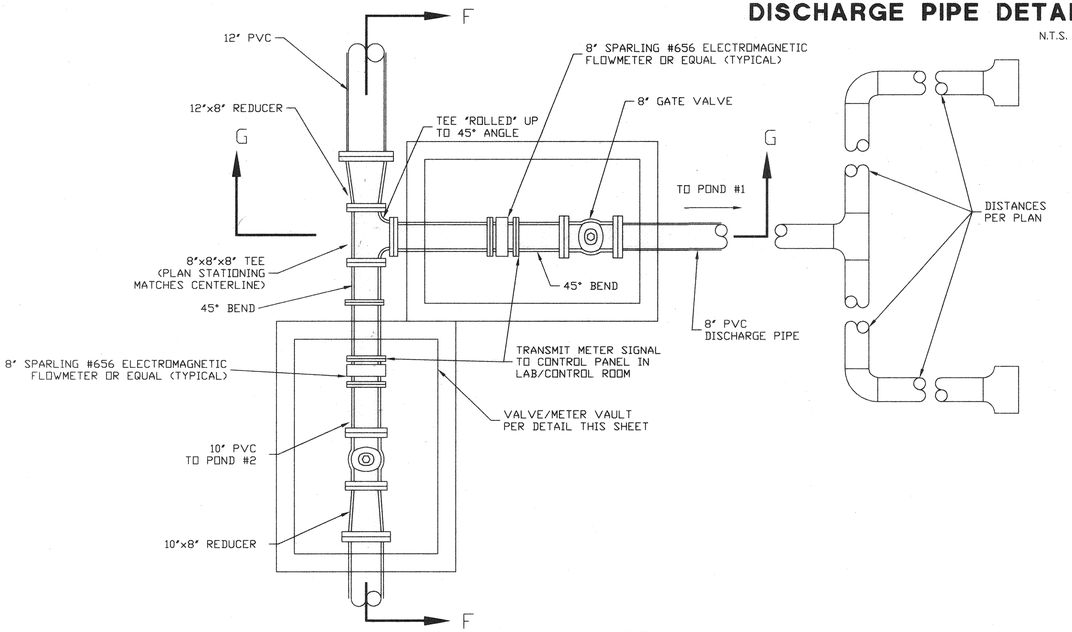

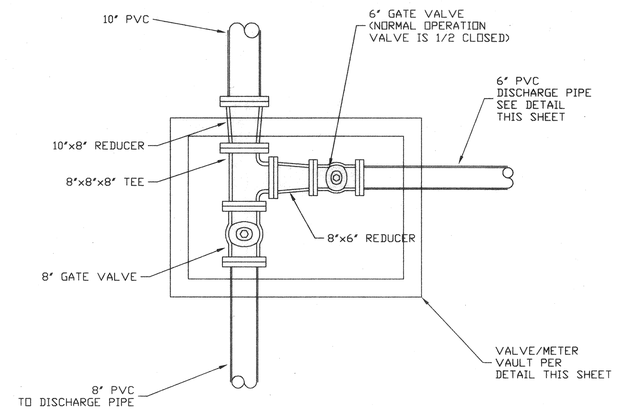

POND #2 SPLITTER VALVE

N.T.S.

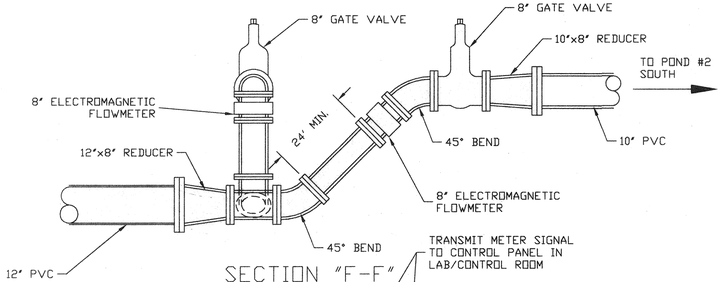

SECTION "F-F"

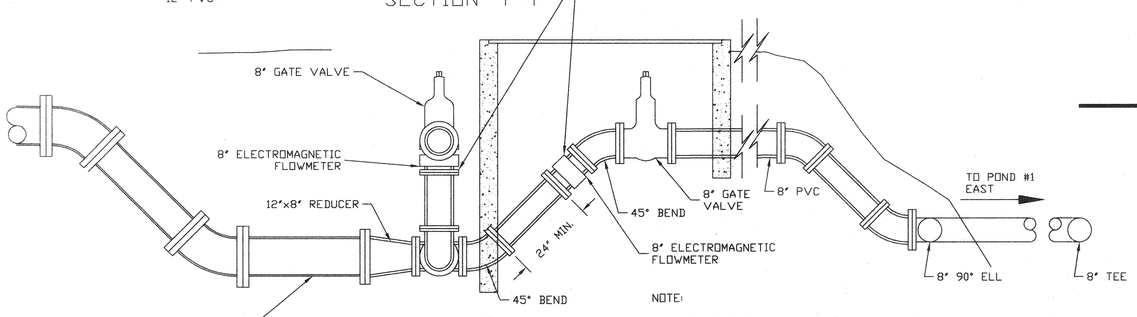

SECTION "G-G"

NOTE:
ELECTROMAGNETIC FLOWMETER SHALL BE 150# SPARLING MODEL #656 OR APPROVED EQUIVALENT

POND #1 SPLITTER VALVE

N.T.S.

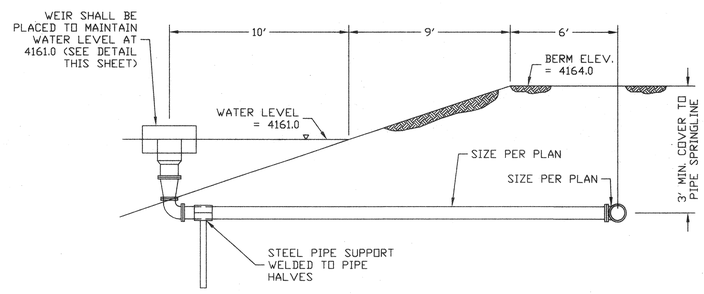

OVERFLOW PIPE DETAIL

N.T.S.

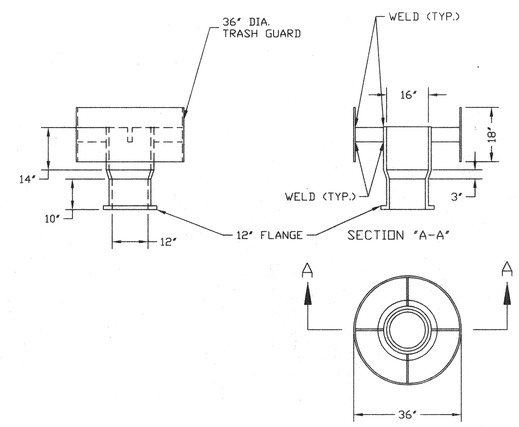

HDPE OVERFLOW WEIR INTAKE

PER CROW INDUSTRIES OR APPROVED EQUIVALENT
N.T.S.

REVISIONS

CITY OF WILLCOX
WASTEWATER
TREATMENT PLANT

TRUELINE ENGINEERING
CIVIL ENGINEERING
609 SOUTH FIFTH AVENUE
SAFFORD, ARIZONA 85546
LAND SURVEYING
(520) 428-1304 FAX 428-1878

DETAILS

11/21/00

DATE: NOV., 2000
JOB No.: 97020
DRAWN BY: L.K.P.
SHEET
28 OF 33

T:\Act_proj\97020\WWTP\plans\DETAILS.dwg, 11/21/00 04:00:03 PM, HP1055C-MPLAR-L.pc3

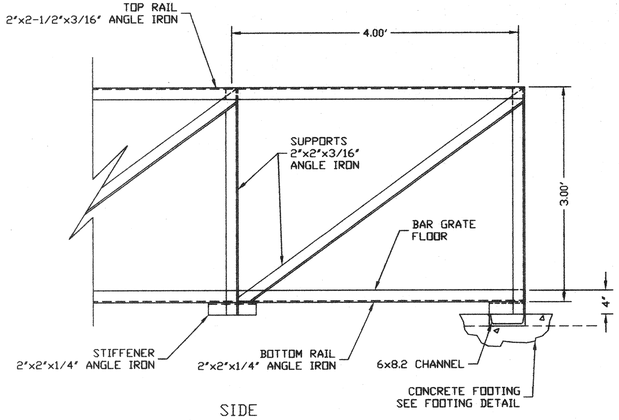

SIDE

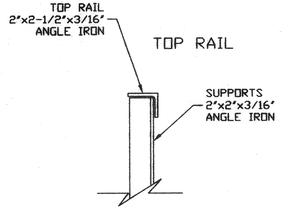

TOP RAIL

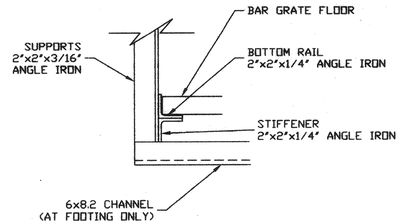

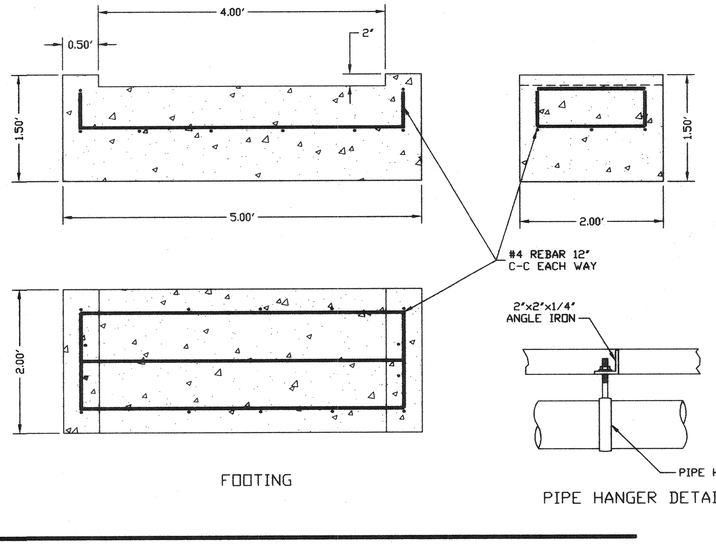

FOOTING

PIPE HANGER DETAIL

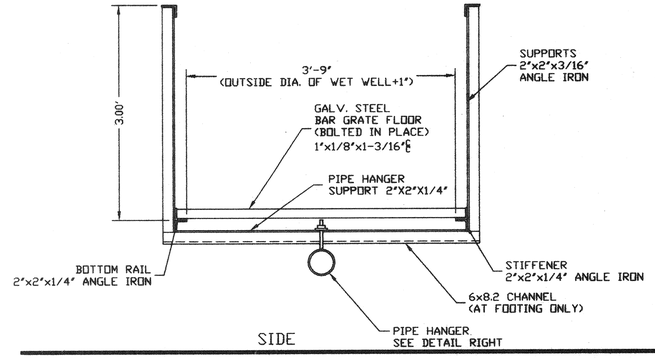

SIDE

CATWALK DETAILS

LAKE COCHISE PUMP STATION AND GOLF COURSE PUMP STATION

N.T.S.

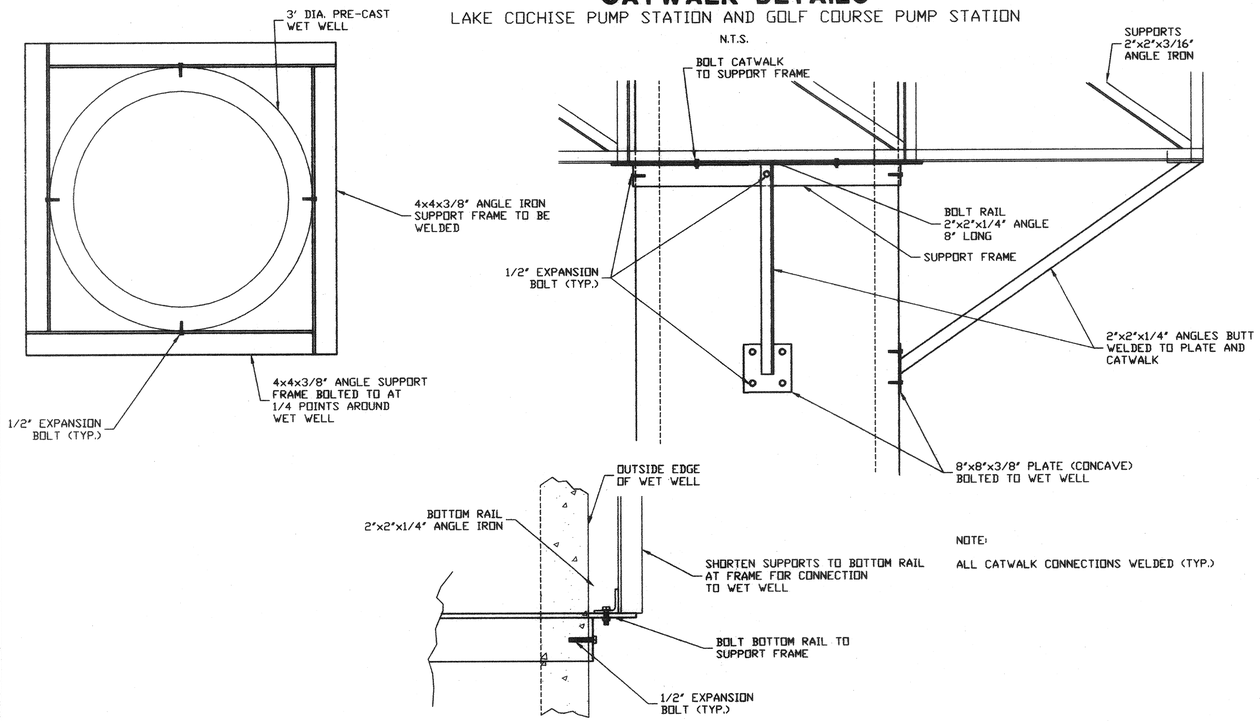

NOTE:

ALL CATWALK CONNECTIONS WELDED (TYP.)

CATWALK TO WETWELL CONNECTION

N.T.S.

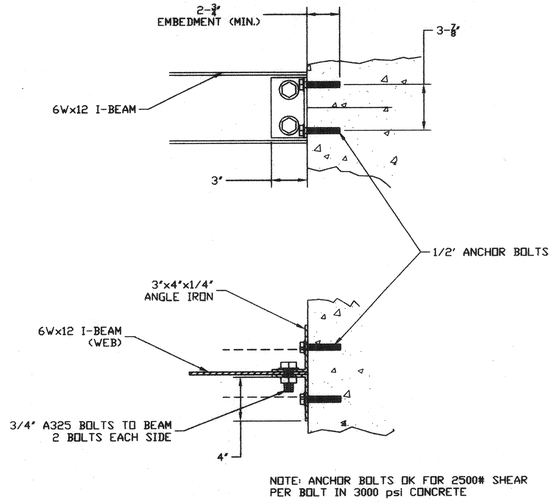

NOTE: ANCHOR BOLTS OK FOR 2500# SHEAR
PER BOLT IN 3000 psi CONCRETE

MAIN LIFT STA. I-BEAM HOIST DETAILS

N.T.S.

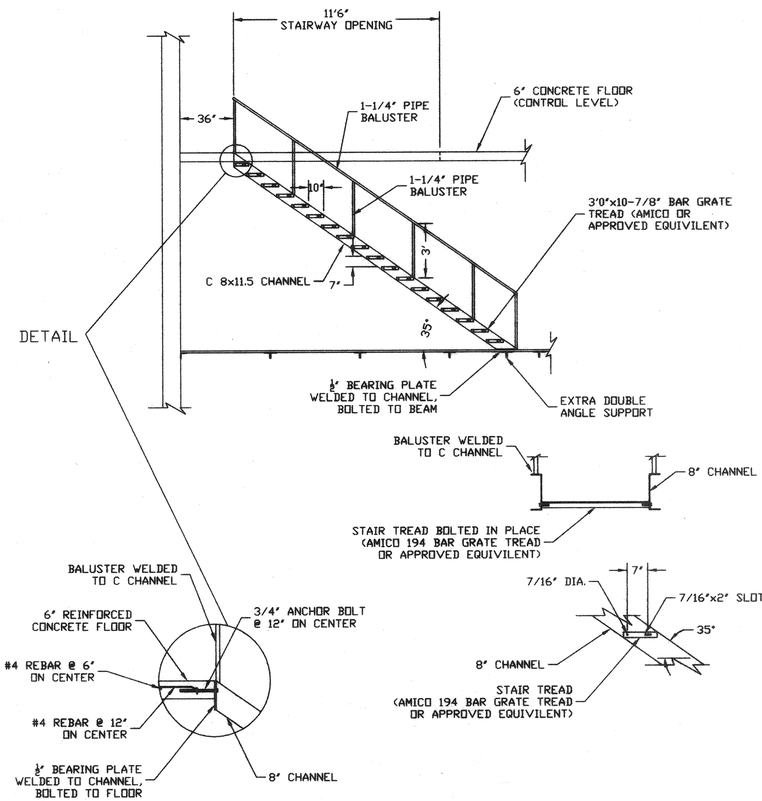

MAIN LIFT STA. STAIRWAY DETAILS

N.T.S.

REVISIONS

CITY OF WILLCOX
WASTEWATER
TREATMENT PLANT

TRUELINE ENGINEERING
CIVIL ENGINEERING
609 SOUTH FIFTH AVENUE
SAFFORD, ARIZONA 85546
(928) 428-1594 FAX 428-1678
LAND SURVEYING

DETAILS

DATE: AUGUST, 2000
JOB No.: 97020
DRAWN BY: L.K.P.

SHEET
29 OF 33

T:\Act_proj\97020\WWTP\plans\DETAILS2.dwg, 08/30/2000 04:28:25 PM, HP1950C-MYLAR-L.pc3

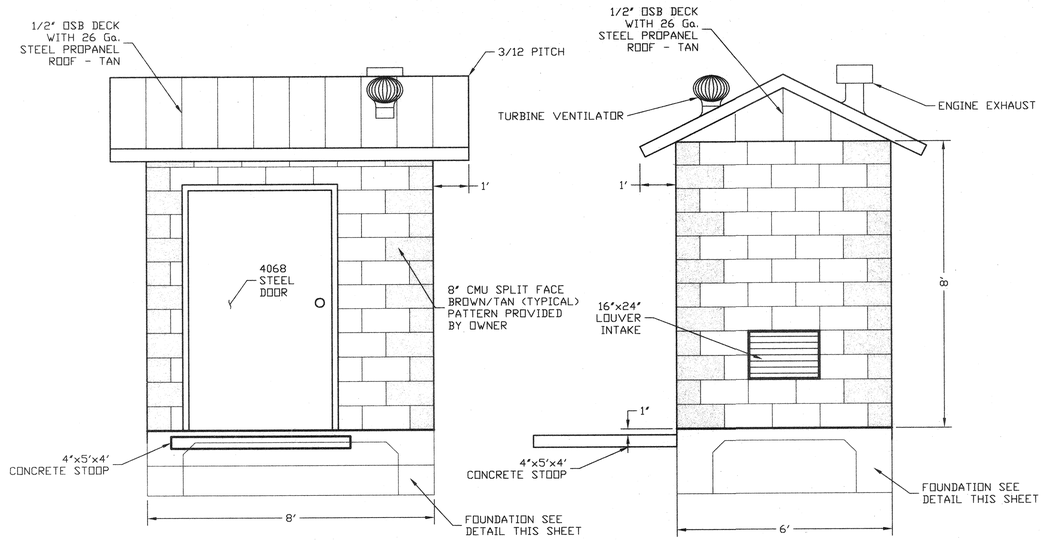

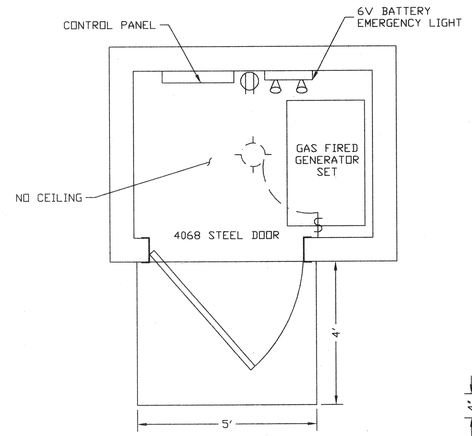

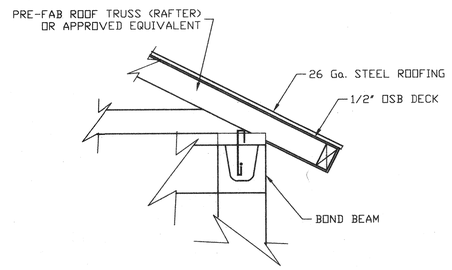

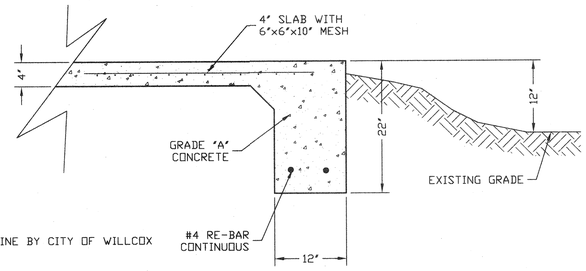

NOTE: GAS LINE BY CITY OF WILLCOX

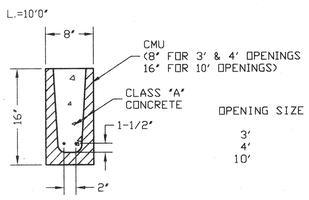

OPENING SIZE	LINTEL	REBAR
3'	8'	1-#4
4'	8'	1-#4
10'	16'	2-#4

LINTEL REINFORCEMENT FROM UBC TABLE A-21-E

STAND-BY POWER BUILDING

SIZE TYPICAL FOR STANDBY POWER UNITS AT:

LIFT STATION #1 - KOA CAMPGROUD L.S.

LIFT STATION #2 - WOOD STREET L.S.

LIFT STATION #3 - RAILROAD L.S.

CHLORINATOR BUILDING

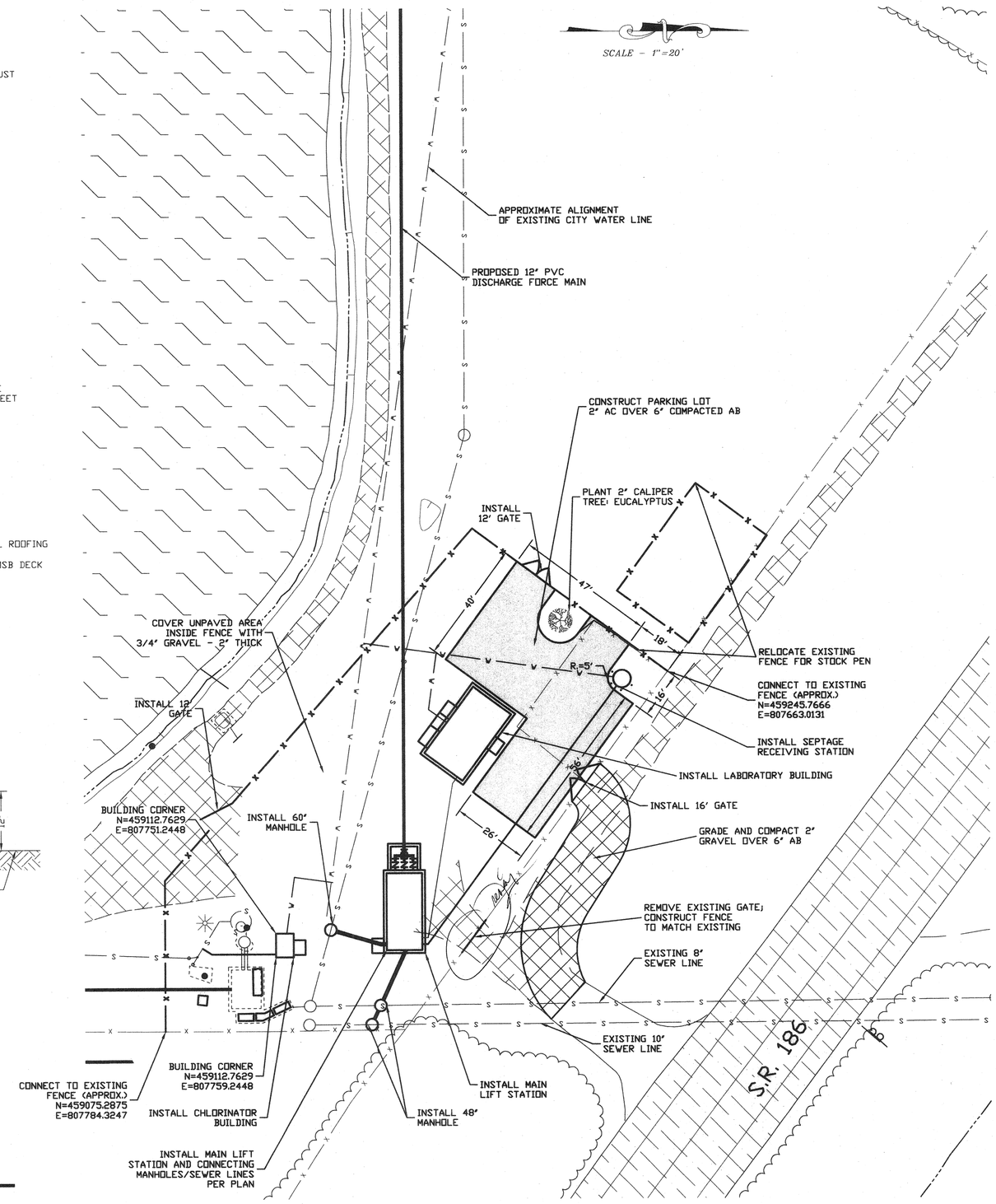

MAIN PLANT LAYOUT

NOTE:

SEE PLANSET FOR BUILDING LOCATIONS (CHLORINATOR BUILDING EXCLUDED)

REVISIONS

CITY OF WILLCOX WASTEWATER TREATMENT PLANT

TRUELINE ENGINEERING
CIVIL ENGINEERING
609 SOUTH FIFTH AVENUE
SAFFORD, ARIZONA 85546
LAND SURVEYING
(520) 428-1504 FAX 428-1878

DETAILS

DATE: NOV., 2000
JOB No.: 97020
DRAWN BY: L.K.P.

SHEET
30 OF 33

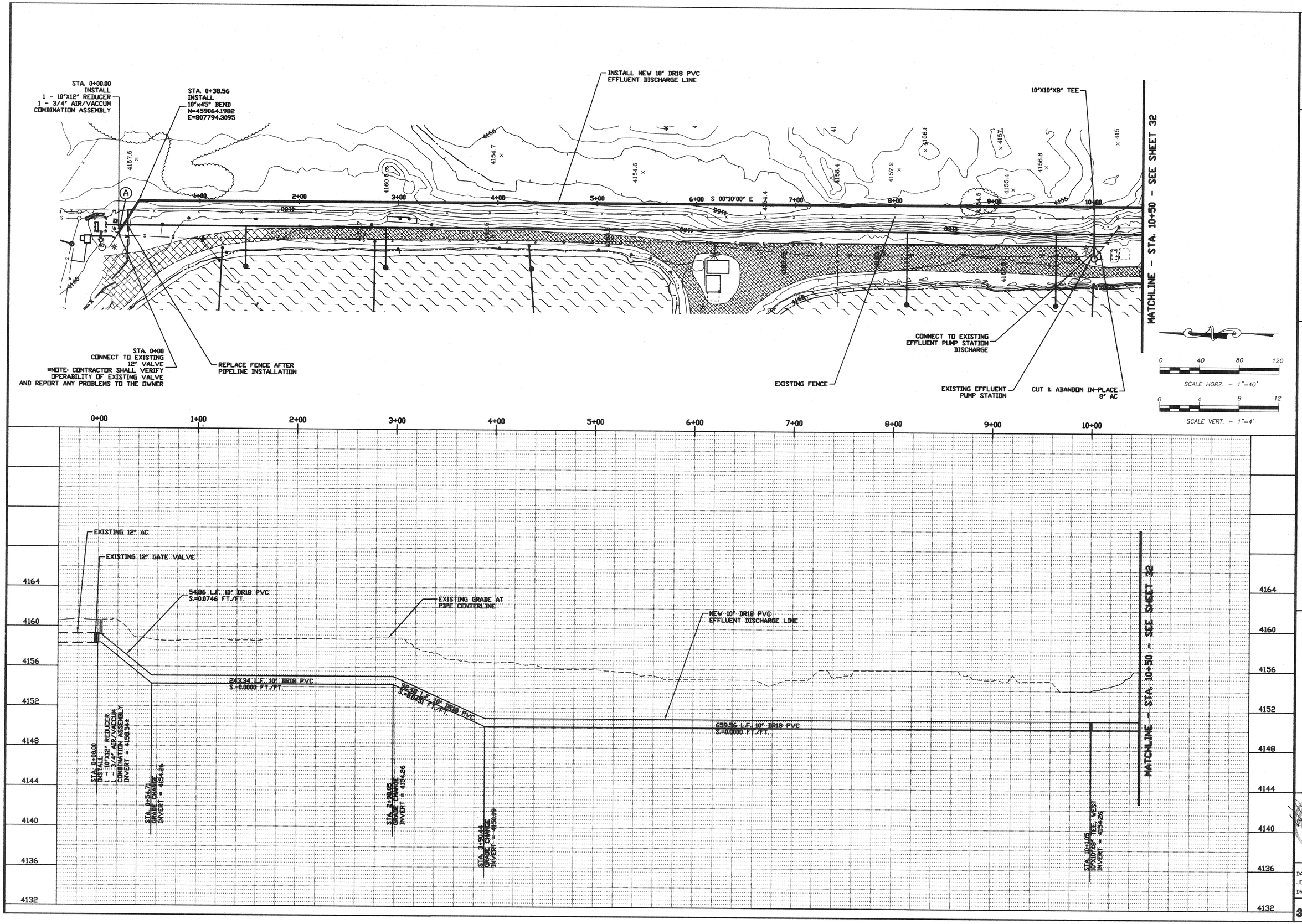

REVISIONS

CITY OF WILLCOX WASTEWATER TREATMENT PLANT

TRUELINE ENGINEERING
CIVIL ENGINEERING
649 SOUTH FIFTH AVENUE
SAFFORD, ARIZONA 85546
LAND SURVEYING
(520) 428-1304 FAX 428-1876

EFFLUENT DISCHARGE LINE REALIGNMENT PLAN & PROFILE

DATE: AUGUST, 2000
JOB No.: 97020
DRAWN BY: T.L.L.

SHEET
31 OF 33

T:\Act_proj\97020\WWTP\plans\FORCE-MAIN-PP1.dwg, 08/30/2000 04:37:04 PM, HP1050C-MYLAR-L.pc3

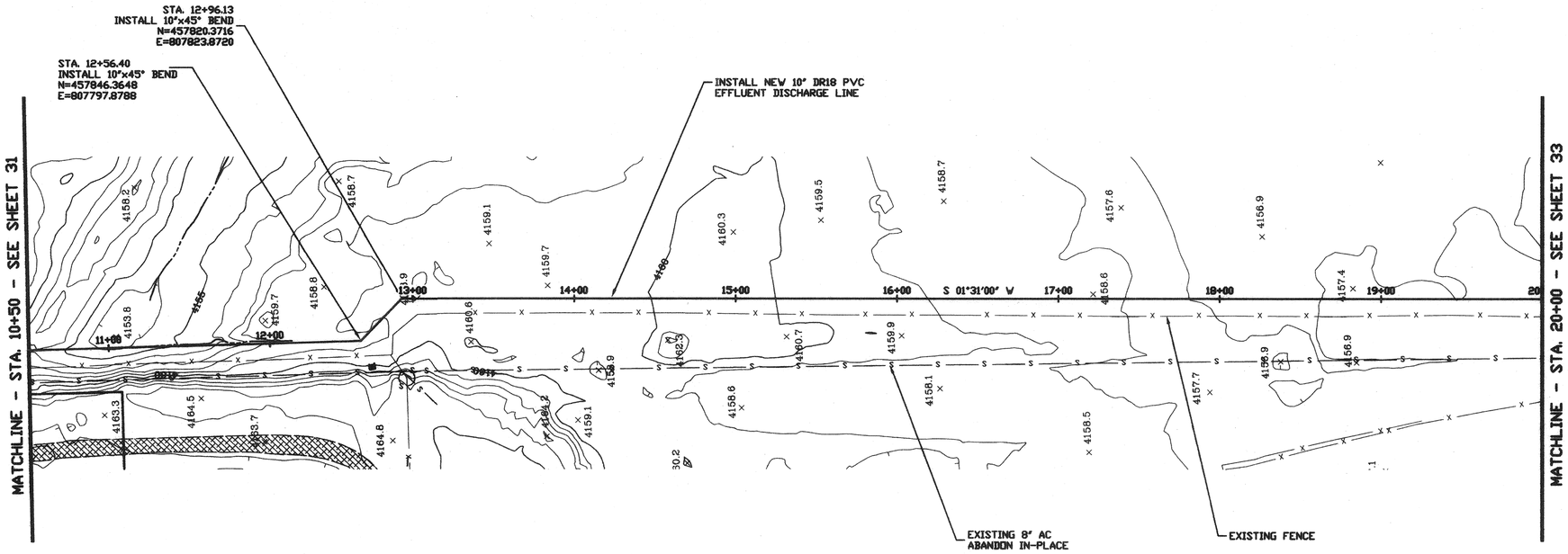

0 40 80 120

SCALE HORZ. - 1"=40'

0 4 8 12

SCALE VERT. - 1"=4'

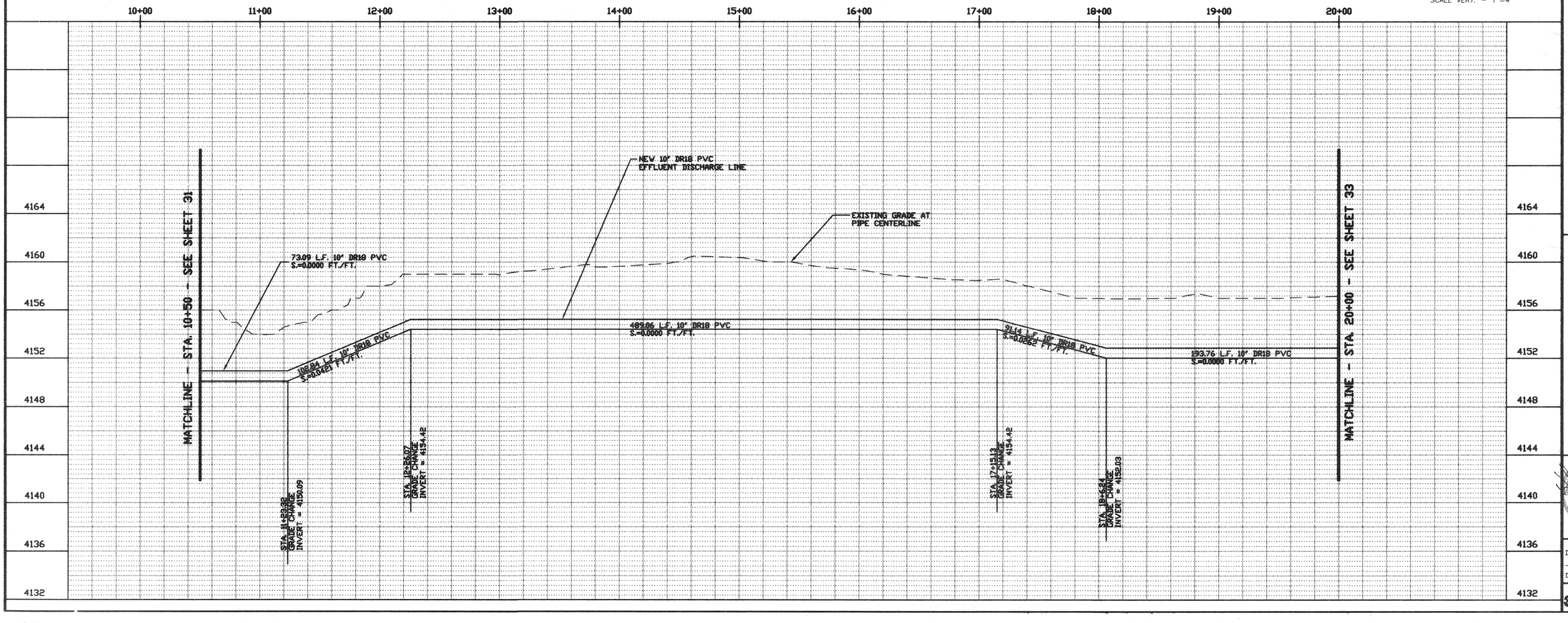

REVISIONS

CITY OF WILLCOX WASTEWATER TREATMENT PLANT

TRUELINE ENGINEERING
CIVIL ENGINEERING
609 SOUTH FIFTH AVENUE
SAFFORD, ARIZONA 85546
LAND SURVEYING
(520) 428-1304 FAX 428-1878

EFFLUENT DISCHARGE LINE REALIGNMENT PLAN & PROFILE

8/31/00

DATE: AUGUST, 2000
JOB No.: 97020
DRAWN BY: T.L.L.

SHEET
32 OF 33

T:\Acd_proj\97020\WWTP\plans\FOR\FS-M1-N-PP2.dwg, 08/30/2000 04:42:36 PM, HP1055C-MYLAR-L.pc3

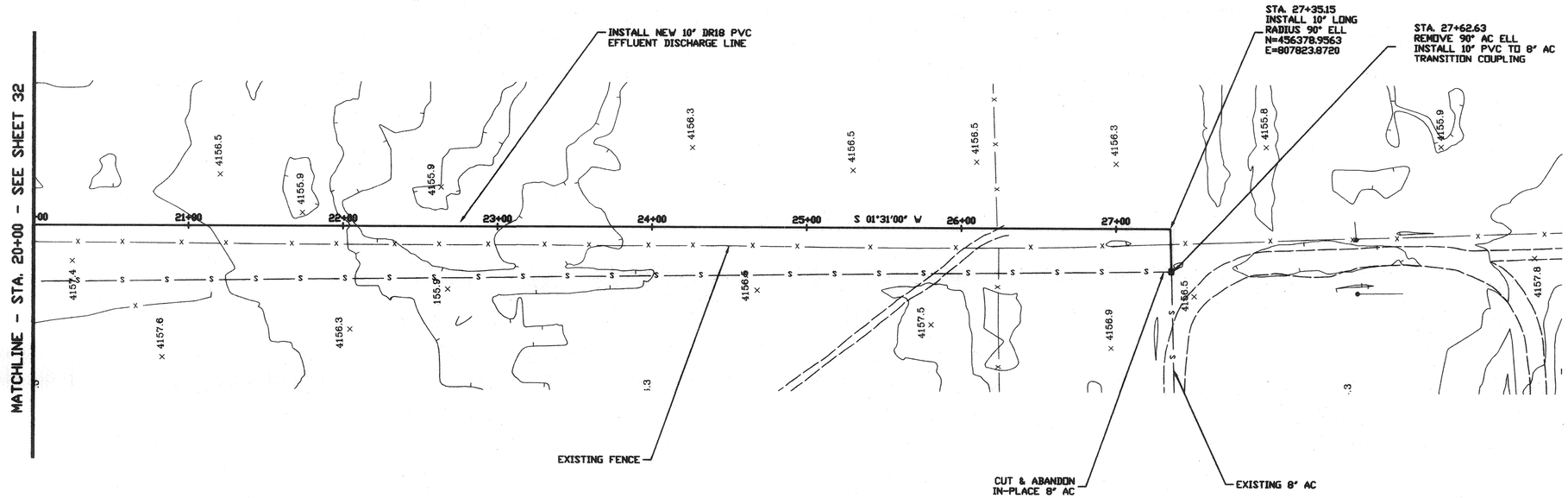

0 40 80 120

SCALE HORZ. – 1"=40'

0 4 8 12

SCALE VERT. – 1"=4'

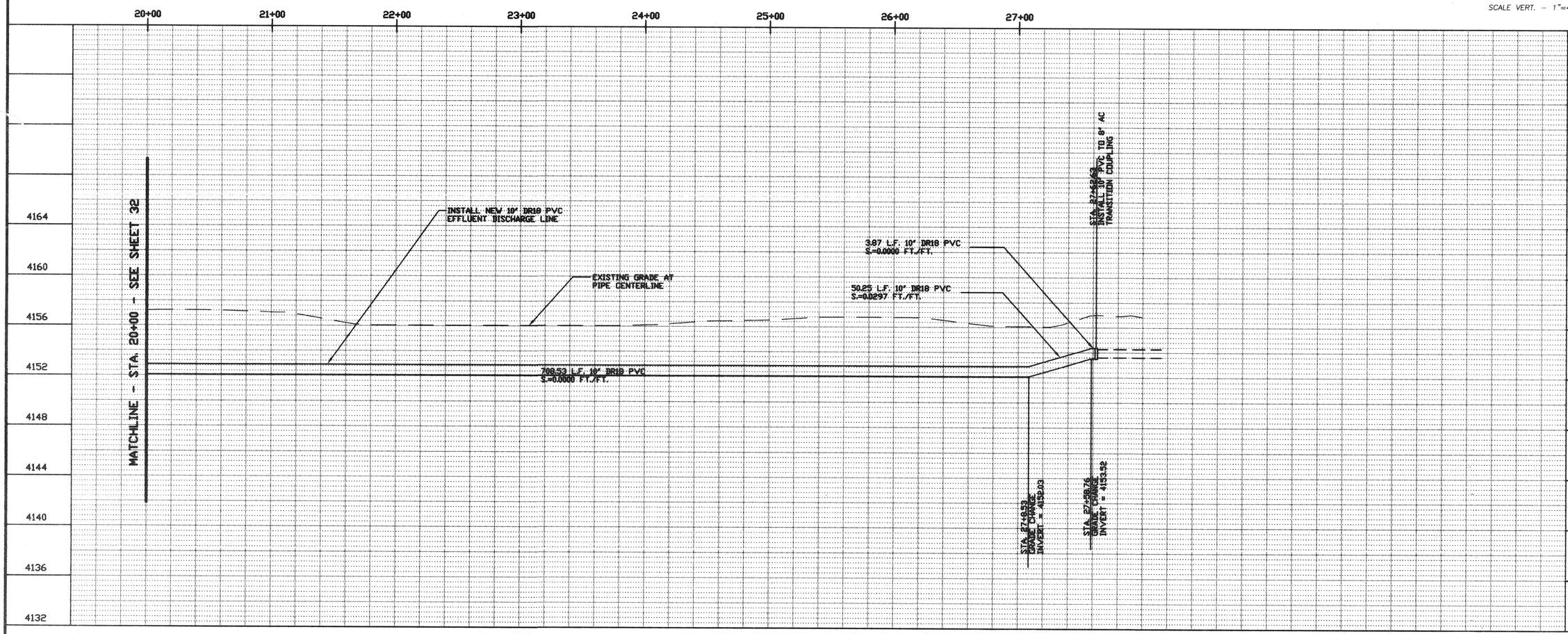

REVISIONS

CITY OF WILLCOX WASTEWATER TREATMENT PLANT

TRUELINE ENGINEERING

CIVIL ENGINEERING
609 SOUTH FIFTH AVENUE
SAFFORD, ARIZONA 85546

LAND SURVEYING
(928) 428-1304 FAX 428-1870

EFFLUENT DISCHARGE LINE REALIGNMENT PLAN & PROFILE

22202 W. CIPRIO LANE
BUCKEYE, ARIZONA 85326
8/31/00
REGISTERED PROFESSIONAL ENGINEER (CIVIL)
CERTIFICATE NO.

DATE: AUGUST, 2000
JOB No.: 97020
DRAWN BY: T.L.L.

SHEET
33 OF 33

J:\WWTP\plans\FORCE-MAIN-PP3.dwg, 08/30/2000 0